WORLDIA
沃尔德

08-T15-WBV11

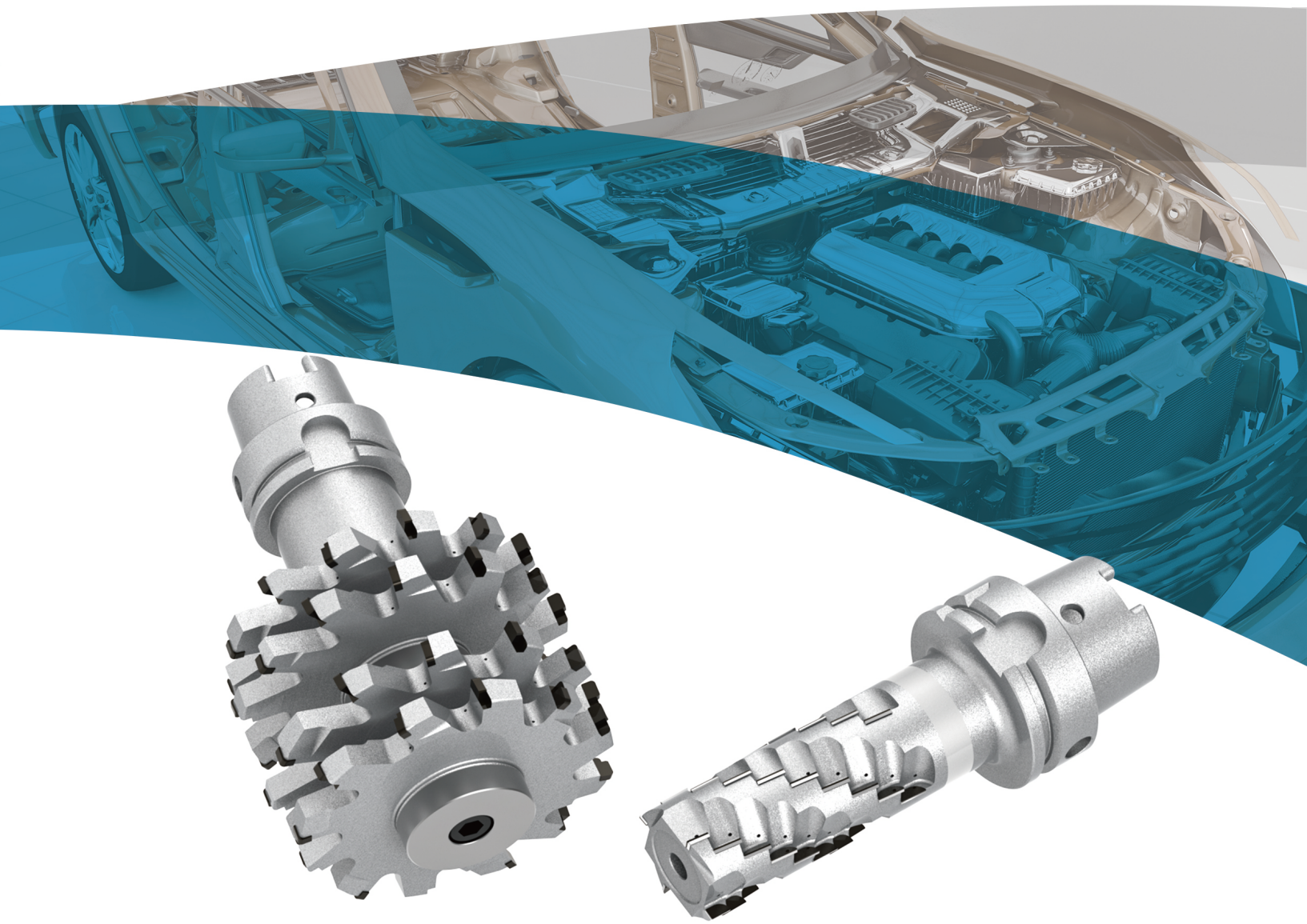

PCD 非标刀具

北京沃尔德金刚石工具股份有限公司
BEIJING WORLDIA DIAMOND TOOLS CO.,LTD.
嘉兴沃尔德金刚石工具有限公司
JIAXING WORLDIA DIAMOND TOOLS CO.,LTD.

WORLDIA 北京沃尔德金刚石工具股份有限公司（股票代码：688028），作为上海证券交易所科创板首批上市公司之一，是一家主要从事超硬刀具及超硬材料制品研发、生产和销售业务的高新技术企业。

公司产品及服务广泛应用于消费类电子产品中的触摸屏、液晶面板等消费电子玻璃的切割，汽车动力系统等核心部件的切削等先进制造领域。

目 录

WORLDIA 沃尔德

沃尔德® 非标刀具产品简介

沃尔德®非标刀具产品类别：

1、旋转类：高精度的 PCD/PCBN铰刀、钻铰刀、镗刀、立铣刀、成型铣刀等；
2、机夹类：焊接式/整体式镗刀片、成型铣刀片、螺纹刀片、轧辊刀片、刨刀；
3、车削类：成型车刀，内圆/外圆槽刀、螺纹车刀；
4、耐磨类：高精密 PCD支撑器、耐磨联轴器、砂轮修整器。

沃尔德®非标刀具应用行业：

1、发动机、轮毂、刹车片等汽车行业相关零部件的加工；
2、手机、笔记本、平板电脑等3C行业关键零部件的加工；
3、空调压缩机壳体、驱动马达等铸铝/铸铁件的加工；
4、复合材料的加工；
5、树脂、橡胶、塑料、半导体等非金属制品的加工；
6、石油钻探行业使用的联轴器、耐磨件等；
7、家具、工艺品等木工行业的加工。

Production Equipment

沃尔德®非标刀具设备简介：

FANUC 六轴高精密慢走丝线切割机，主要承担 PCD/PCBN 铰刀、铣刀、轮廓刀等非标刀具的加工。设备性能稳定，加工精度可靠，可获得较高品位的刃口质量和表面光洁度。

DMG 高精密激光切割机，主要承担 PCD/PCBN/CVD 等非标刀具的加工，能够保证较高的加工精度和良好的外观效果，尤其在 PCD 铰刀断屑槽加工方面具有明显优势。

卓勒对刀仪，可对各类切削刀具进行方便快速地预调、测量和管理，设备配有海德汉光栅尺，测量数据精确，重复性和再现性稳定。

激光测径仪，能够对测量数据进行自动采集、科学处理、快速运算，测量精度稳定，测量效率较高。

翰默动平衡仪，可对刀柄进行单平面和双平面动平衡校正，采用激光标记，配合主轴自动定位，实现微米级的夹持精度，最小检测精度可达 0.5gmm，计算结果精确，操作方便快捷。

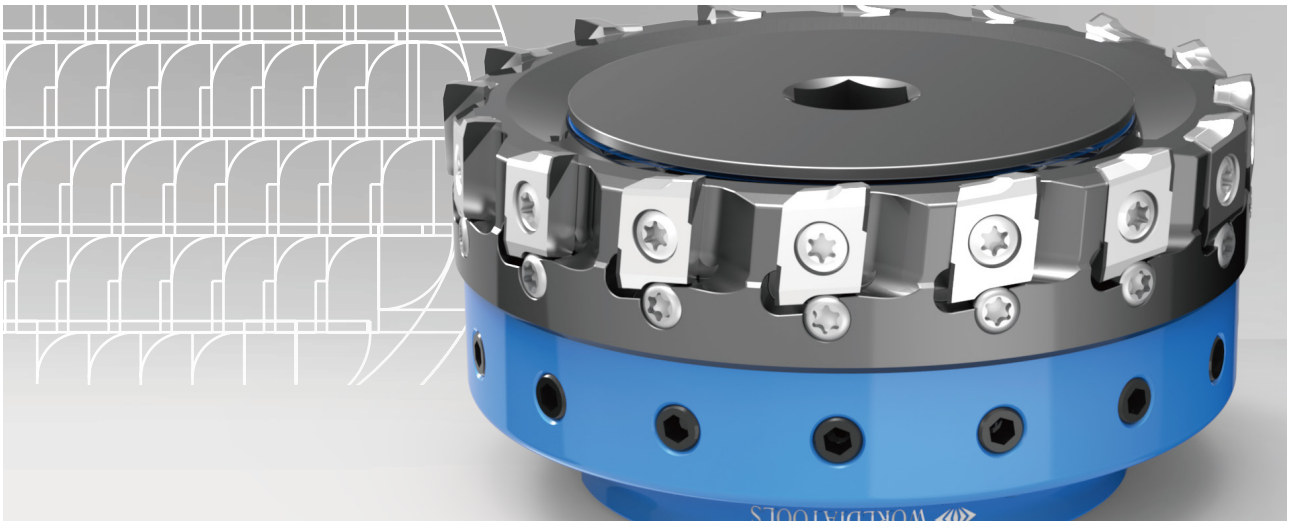

铝合金发动机缸盖加工

Cylinder Head

PCD NON-STANDARD TOOLS

For Auto Parts

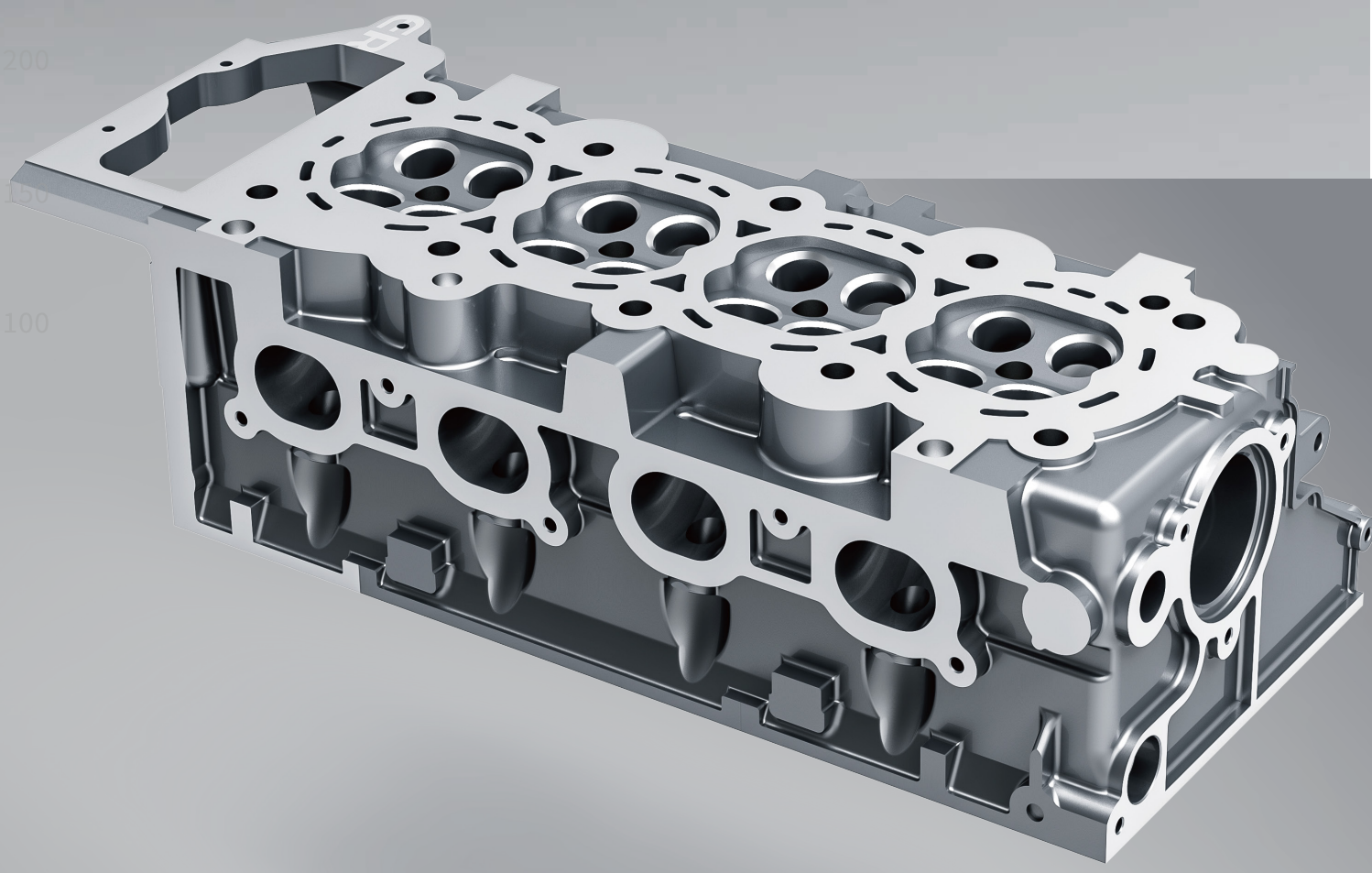

面铣刀盘

S=12000r/min
fz=0.05mm/z

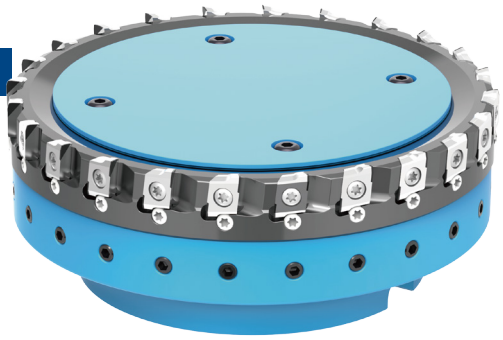

三面刃铣刀

S=6000r/min
fz=0.03mm/z

阶梯钻铰刀

S=5500r/min
fz=0.12mm/z

底铣铰刀

S=4000r/min
fz=0.03mm/z

阶梯铰刀

S=5500r/min
fz=0.05mm/z

阶梯铰刀

S=3500r/min
fz=0.02mm/z

离合器壳体加工

Clutch Housing

PCD NON-STANDARD TOOLS

For Auto Parts

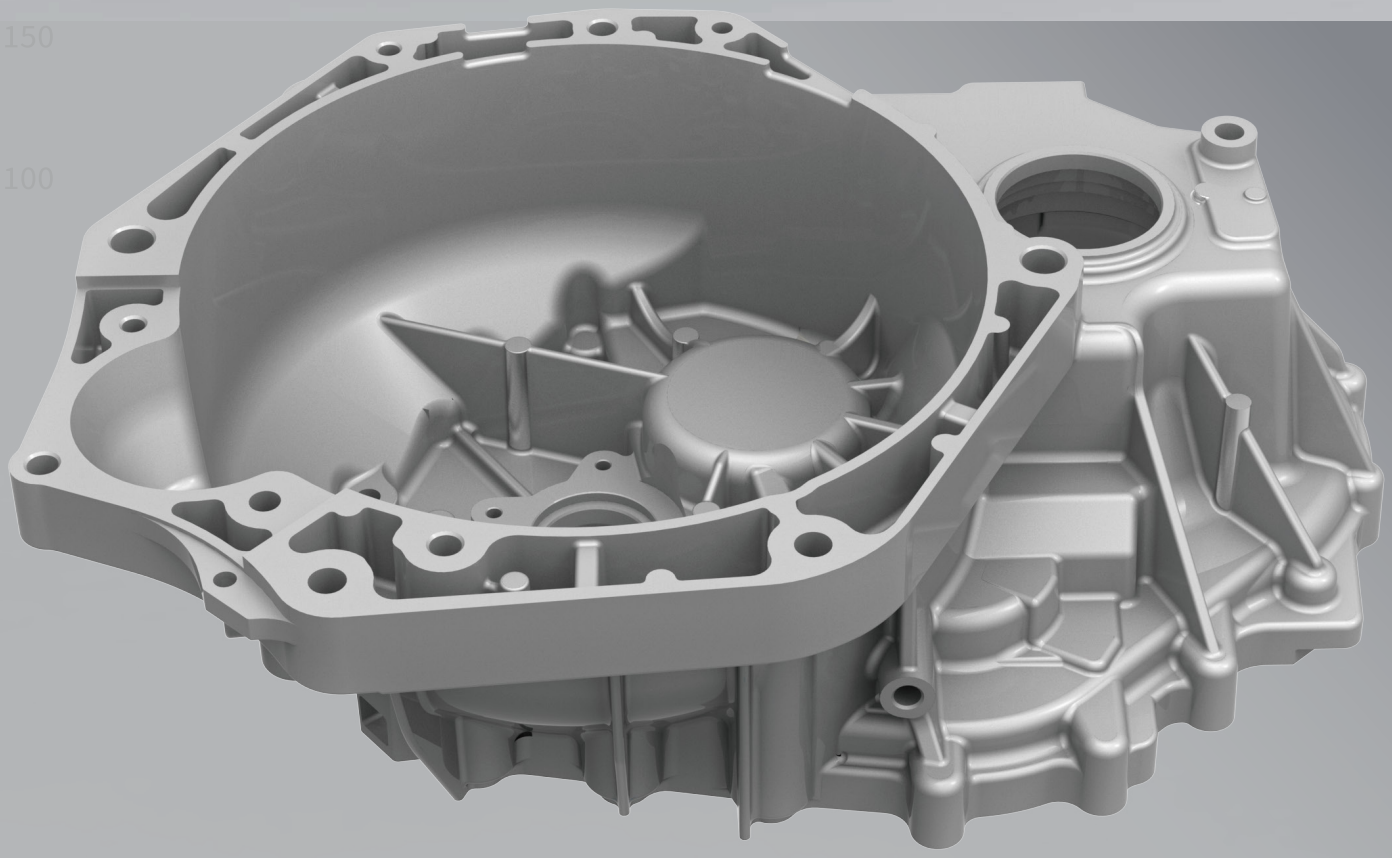

面铣刀盘

S=6000r/min
fz=0.03mm/z

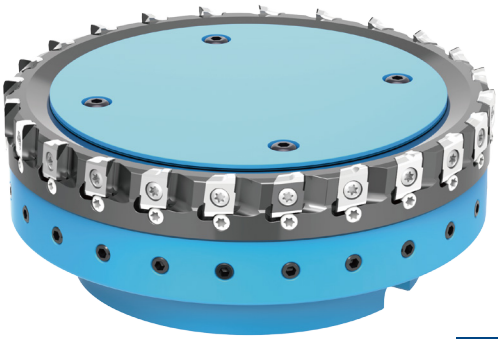

阶梯镗刀

S=4000r/min
fz=0.10mm/z

阶梯铰刀

S=5500r/min
fz=0.12mm/z

导条镗刀

S=2200r/min
fz=0.08mm/z

成型铣刀

S=6500r/min
fz=0.15mm/z

组合镗刀

S=3500r/min
fz=0.08mm/z

变速箱壳体油底壳加工

Gear-box/Oil Pan

PCD NON-STANDARD TOOLS

For Auto Parts

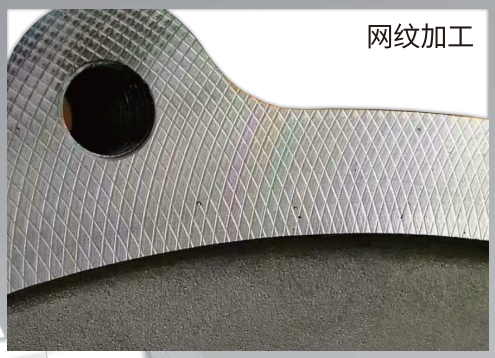

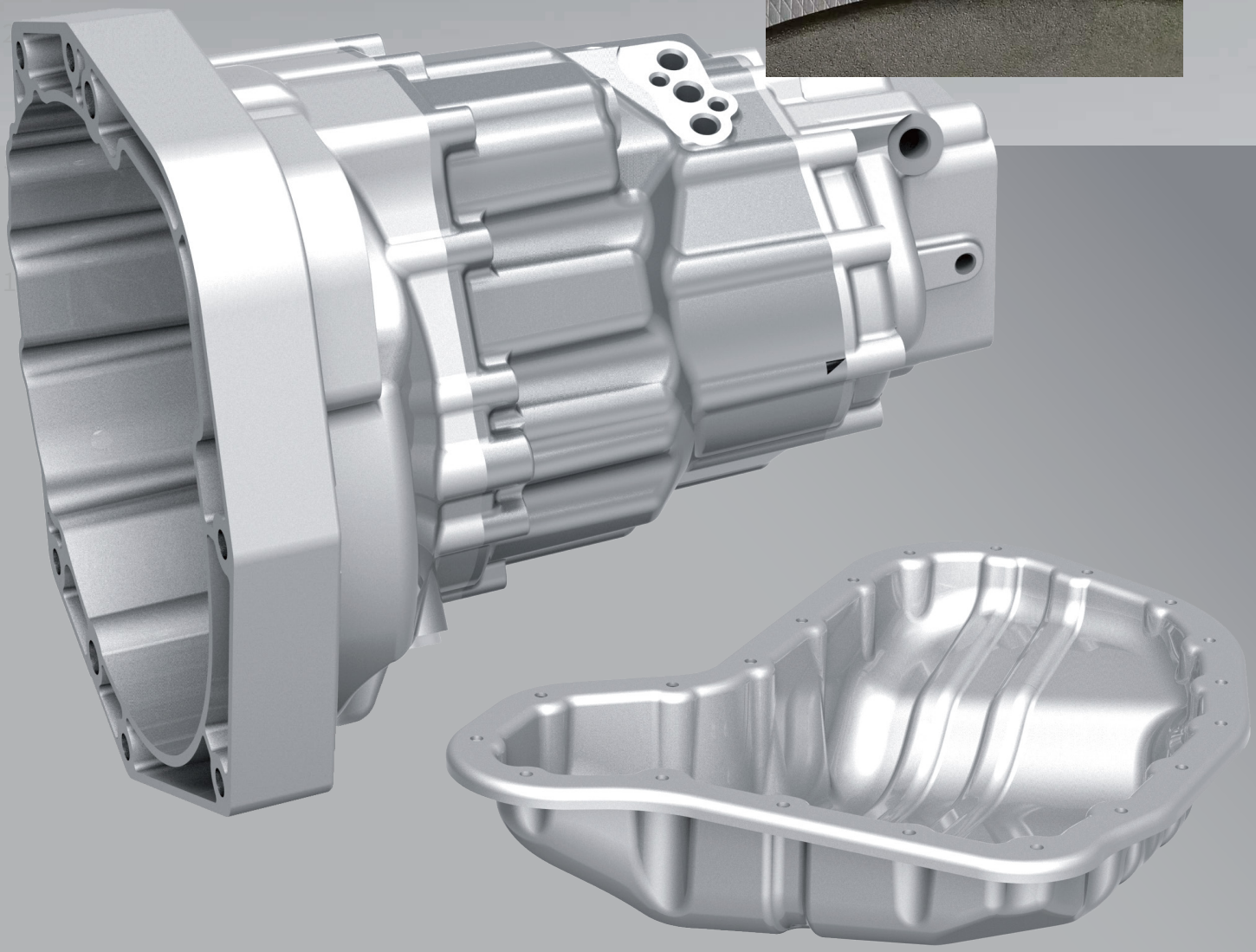

面铣刀盘

S=6000r/min
fz=0.03mm/z

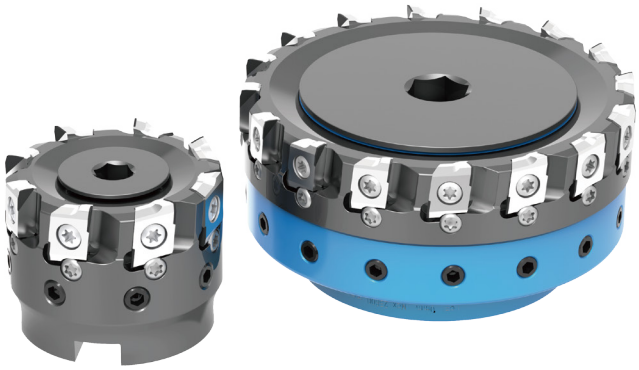

阶梯铰刀

S=12000r/min
fz=0.05mm/z

套铣铰刀

S=3500r/min
fz=0.02mm/z

阶梯铰刀

S=4000r/min
fz=0.04mm/z

多刃立铣刀

S=5500r/min
fz=0.05mm/z

转向器加工

Steering Gear

PCD NON-STANDARD TOOLS
For Auto Parts

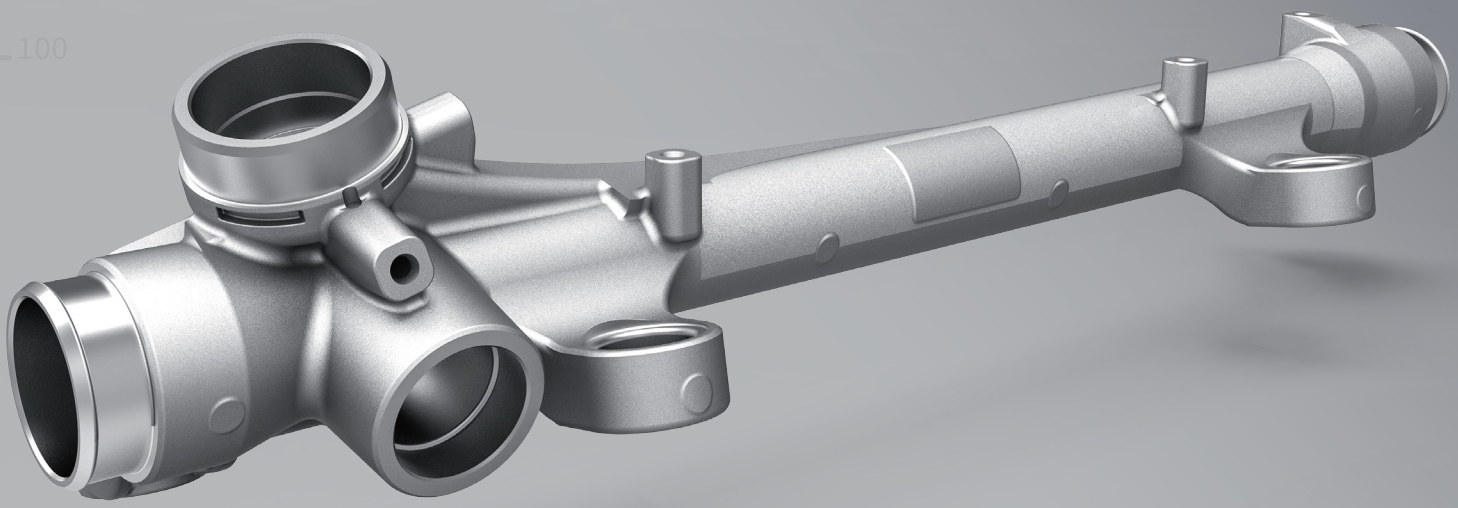

阶梯钻铰刀

S=4500r/min
fz=0.03mm/z

反倒角铣刀

S=3500r/min
fz=0.06mm/z

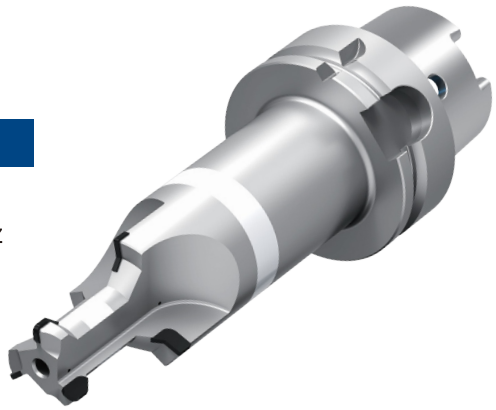

单阶梯铰刀

S=3500r/min
fz=0.1mm/z

多阶梯铰刀

S=4000r/min
fz=0.08mm/z

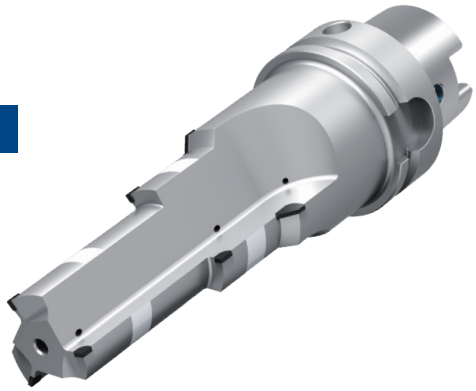

多阶梯槽铣刀

S=3500r/min
fz=0.03mm/z

套铣刀

S=3500r/min
fz=0.055mm/z

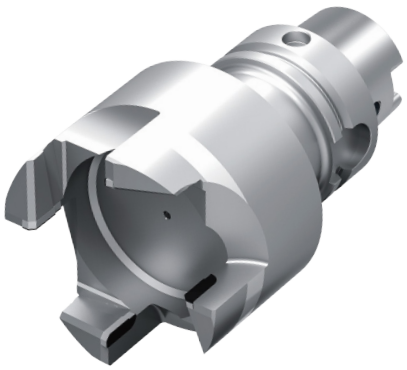

刹车钳体加工

Brake Caliper

PCD NON-STANDARD TOOLS

For Auto Parts

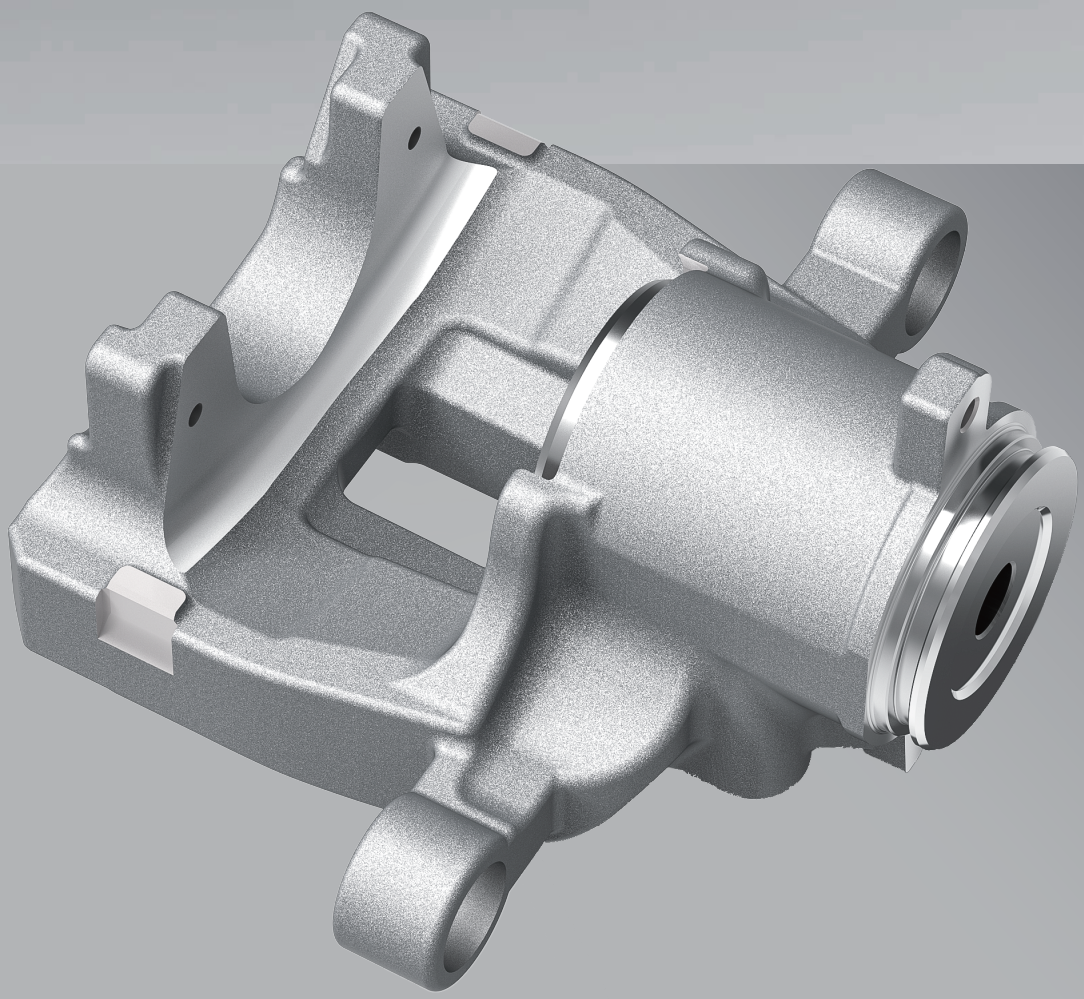

三面刃铣刀盘

S=4500r/min
fz=0.035mm/z

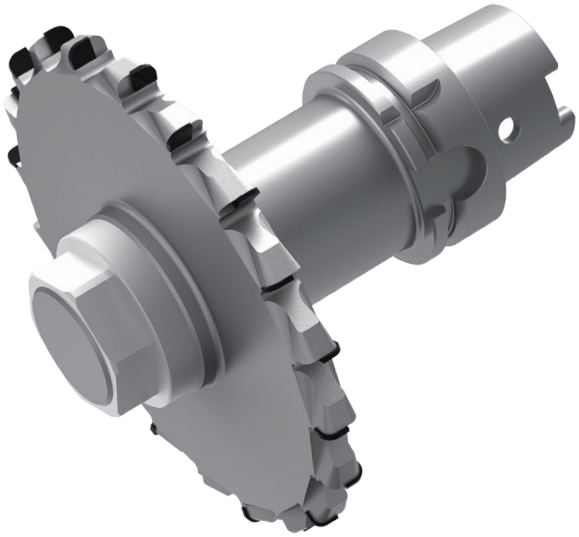

槽铣刀

S=6500r/min
fz=0.045mm/z

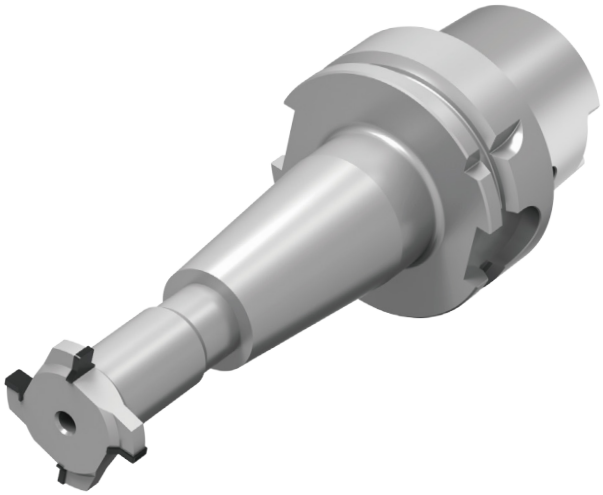

套铣槽刀

S=6000r/min
fz=0.05mm/z

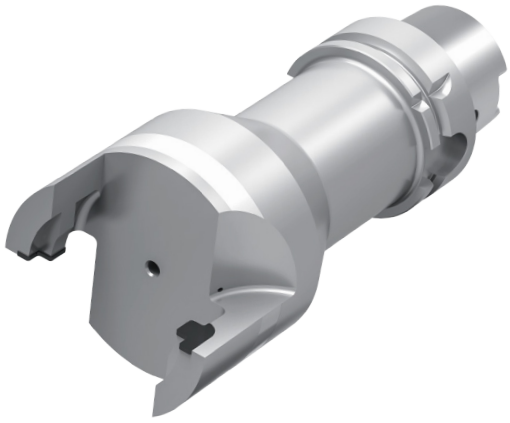

节气门加工

Throttle Valve

PCD NON-STANDARD TOOLS
For Auto Parts

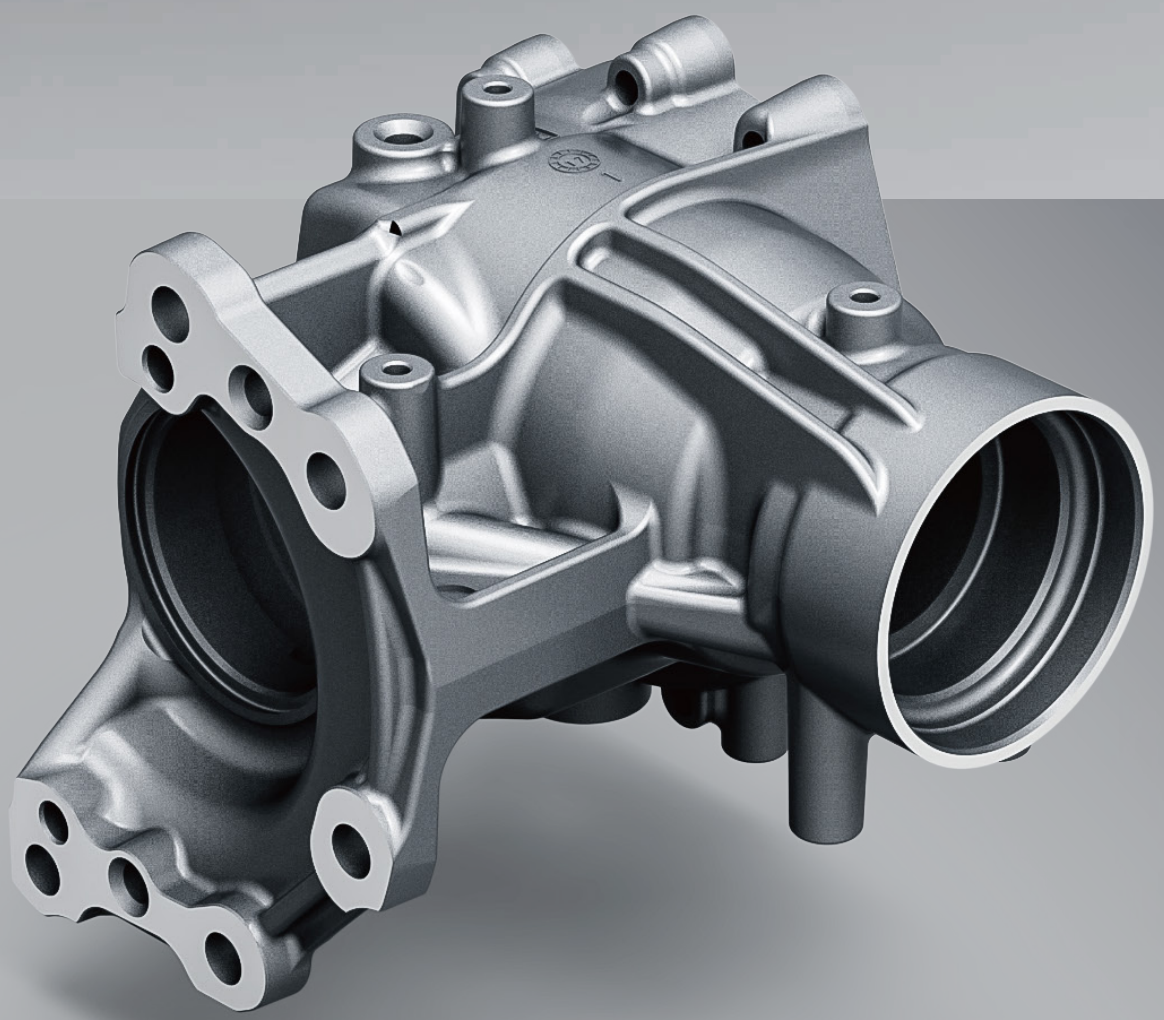

成型铣刀

S=3500r/min
fz=0.045mm/z

阶梯钻铰刀

S=3600r/min
fz=0.015mm/z

侧面铣刀

S=4000r/min
fz=0.055mm/z

阶梯钻铰刀

S=3750r/min
fz=0.025mm/z

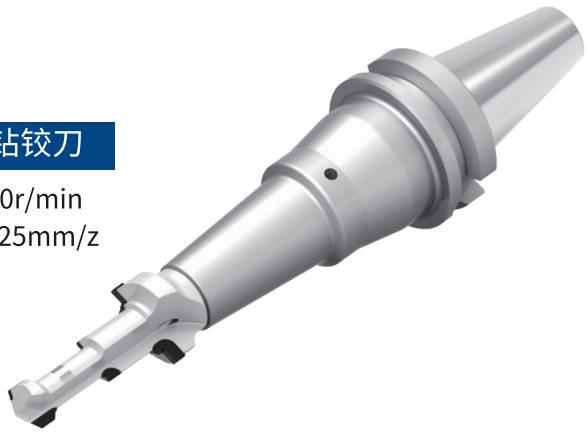

阶梯铰刀

S=4200r/min
fz=0.015mm/z

节气门加工

Throttle Valve

PCD NON-STANDARD TOOLS
For Auto Parts

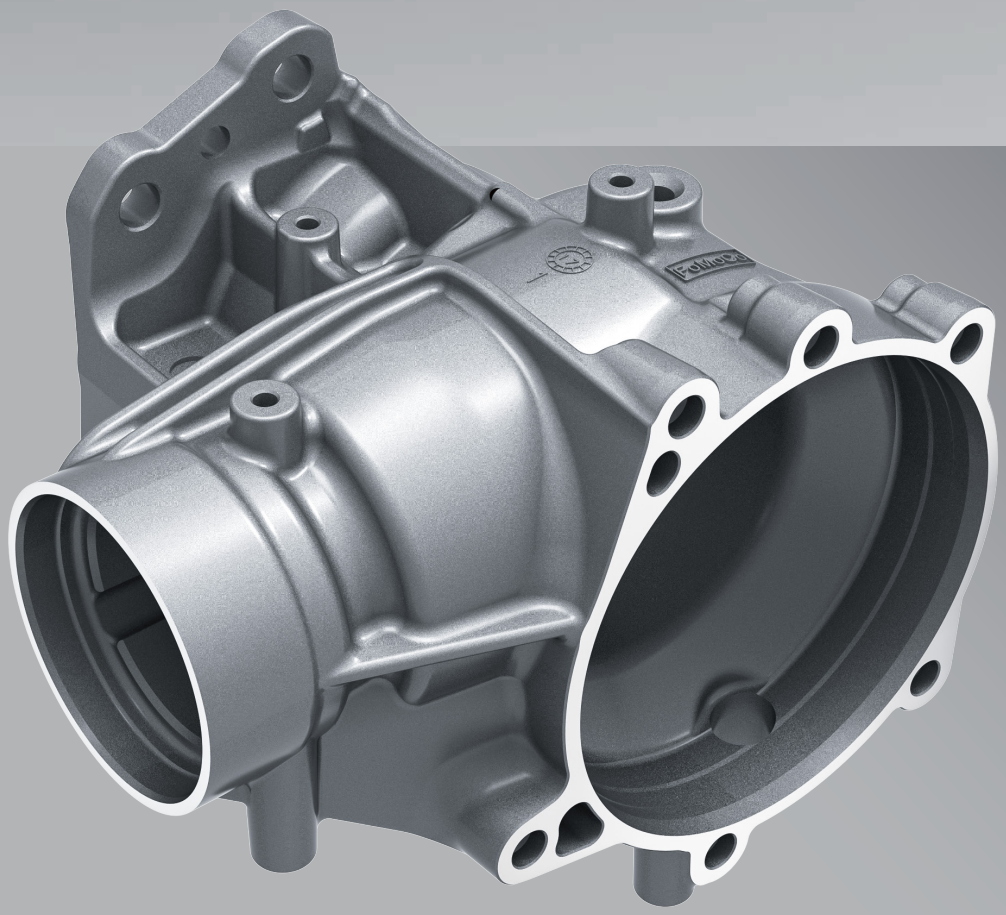

密齿多阶梯铰刀

S=8000r/min
fz=0.05mm/z

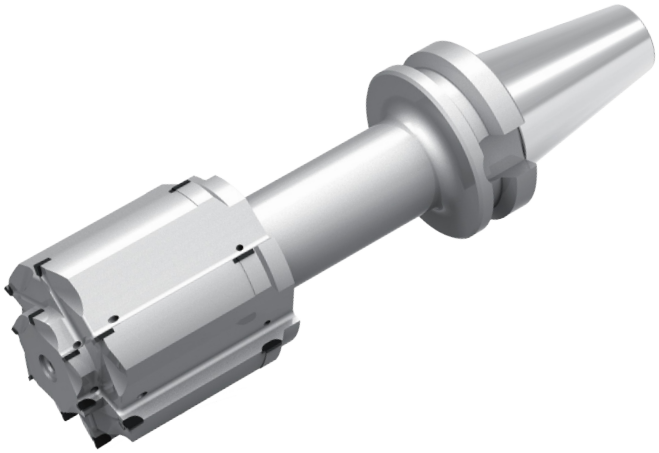

深孔钻铰刀

S=3500r/min
fz=0.012mm/z

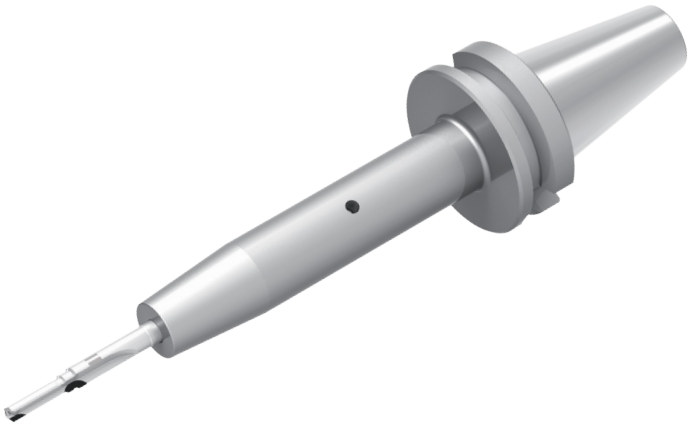

可调精镗刀

S=5500r/min
fz=0.05mm/z

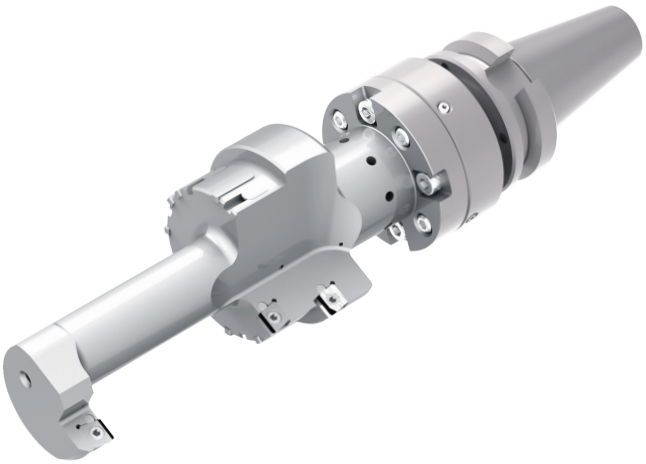

转向节加工

Steering Knuckles

PCD NON-STANDARD TOOLS

For Auto Parts

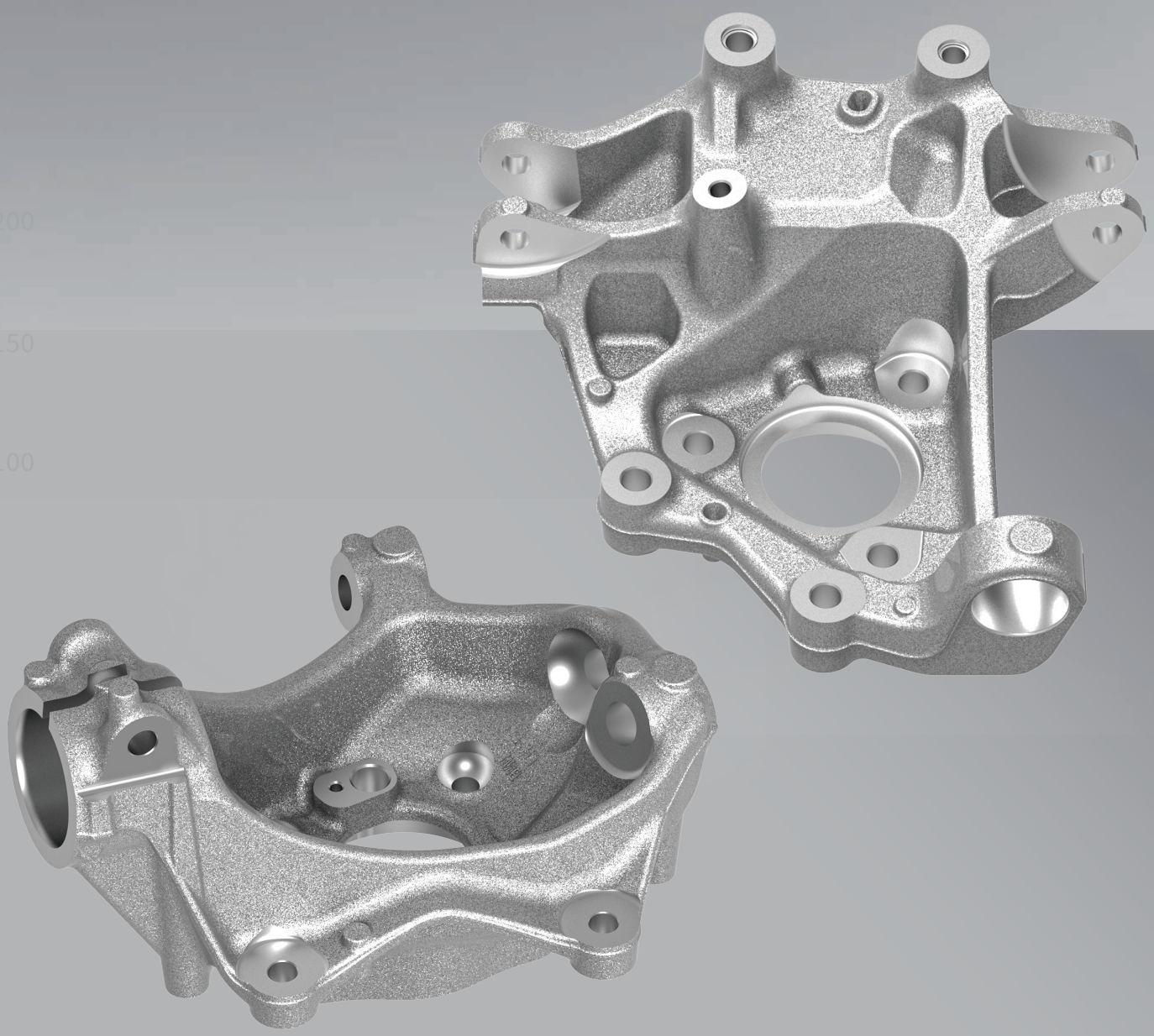

粗精一体钻铰刀

S=5500r/min
fz=0.09mm/z

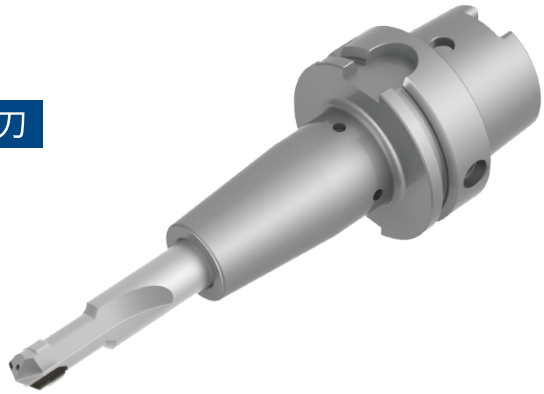

阶梯精镗刀

S=2500r/min
fz=0.10mm/z

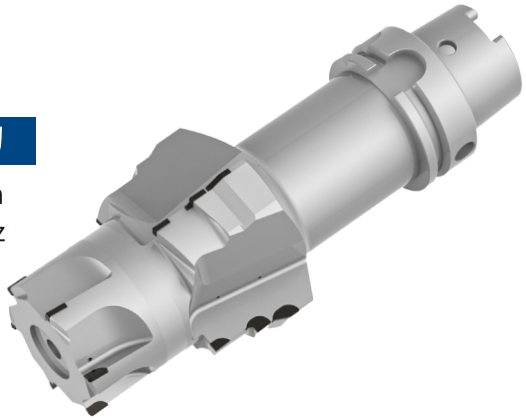

机夹粗镗刀

S=1800r/min
fz=0.15mm/z

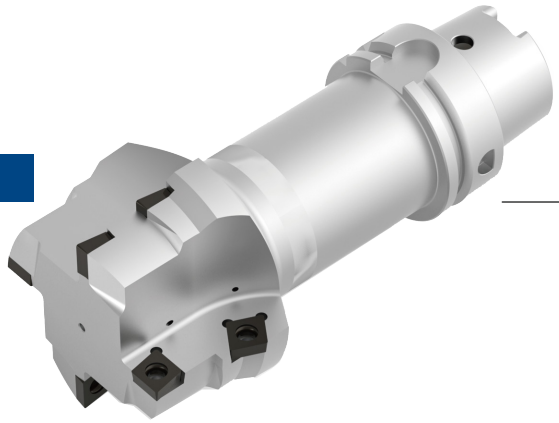

轮廓反铣刀

S=3300r/min
fz=0.05mm/z

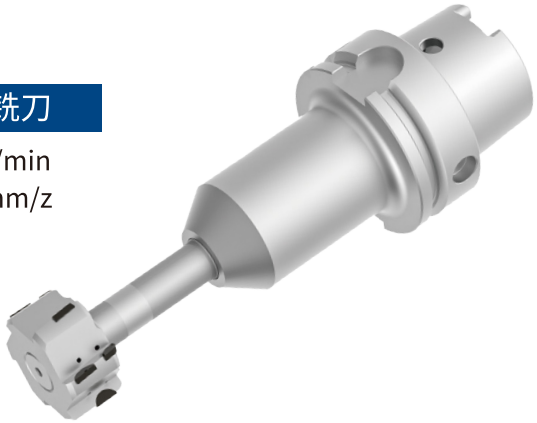

阶梯铰刀

S=4200r/min
fz=0.015mm/z

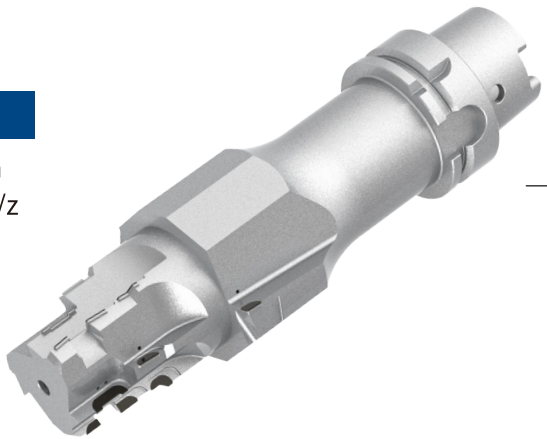

转向节加工

Steering Knuckles

PCD NON-STANDARD TOOLS
For Auto Parts

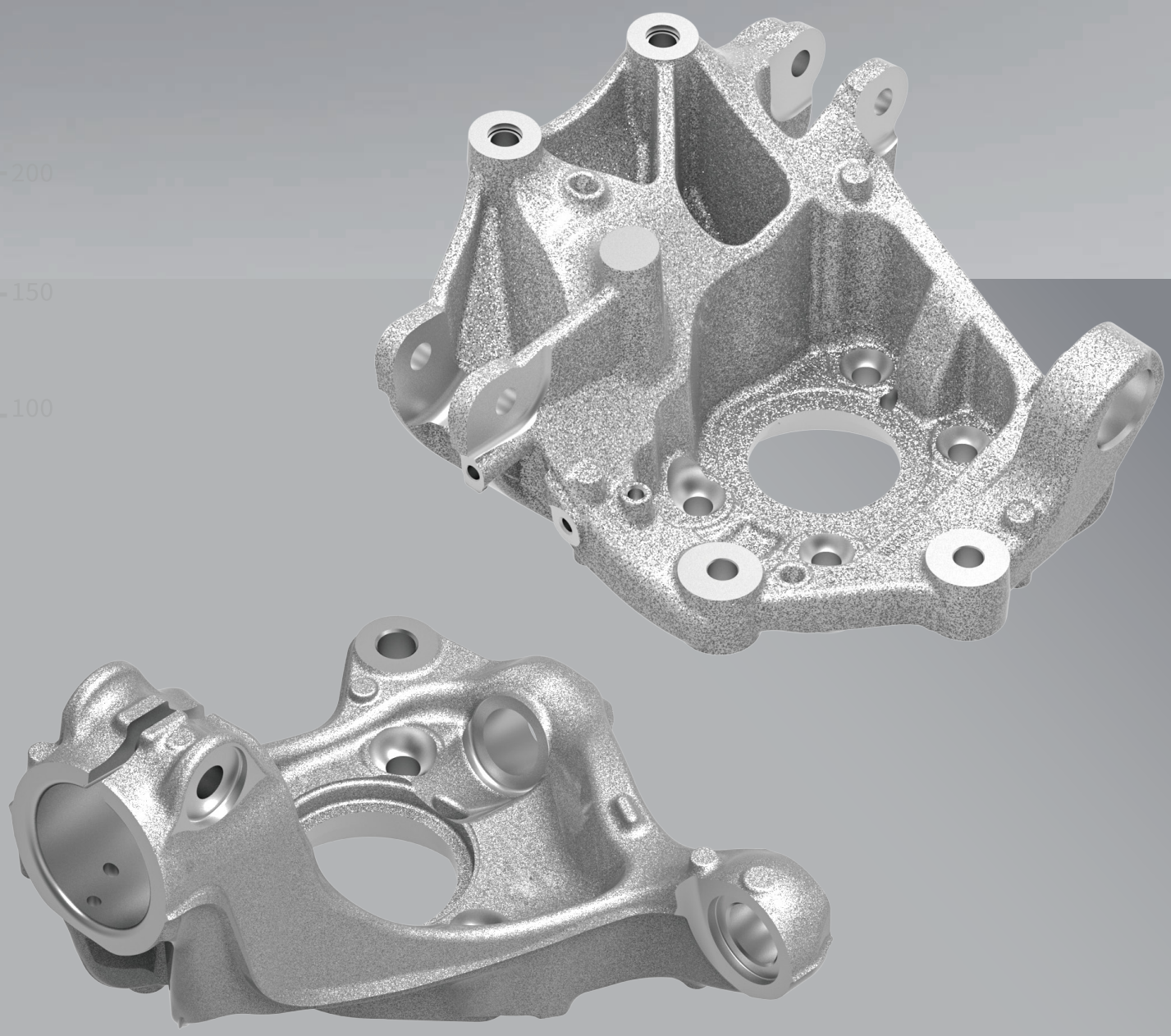

四层盘铣刀

S=3500r/min
fz=0.16mm/z

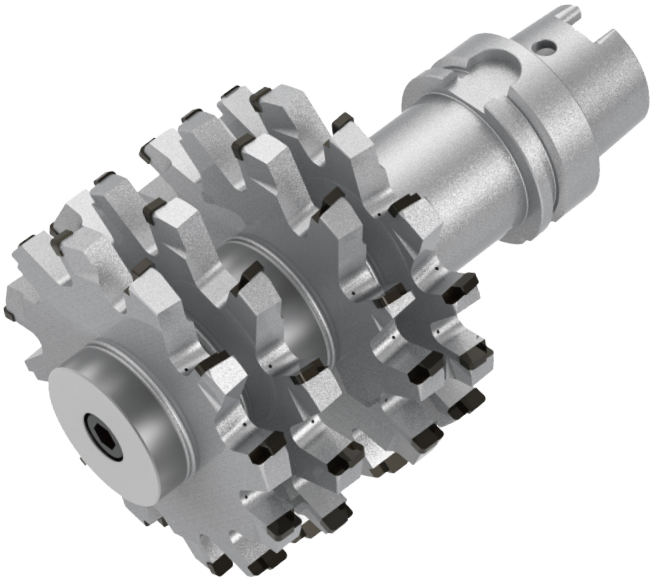

整体球凹铣刀

S=6000r/min
fz=0.10mm/z

三面刃盘铣刀

S=2600r/min
fz=0.08mm/z

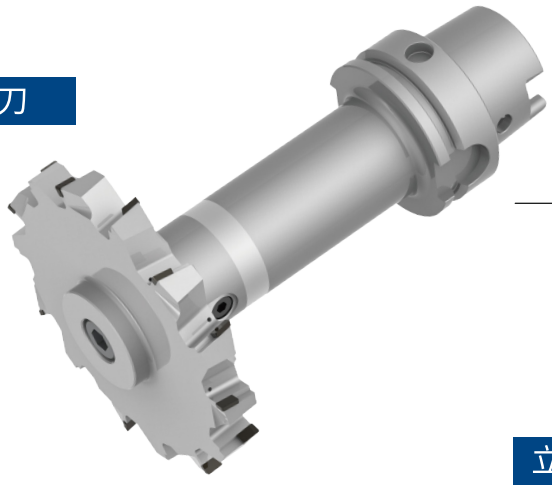

立铣刀

S=6500r/min
fz=0.08mm/z

涡轮增压器压壳加工

Turbocharger

PCD NON-STANDARD TOOLS

For Auto Parts

成型轮廓铣刀

S=8000r/min
fz=0.15mm/z

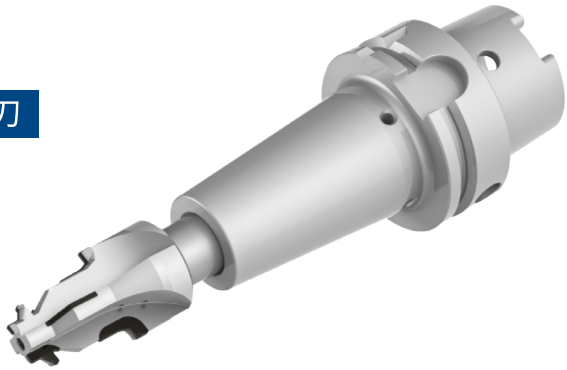

锥度铣刀

S=6000r/min
fz=0.08mm/z

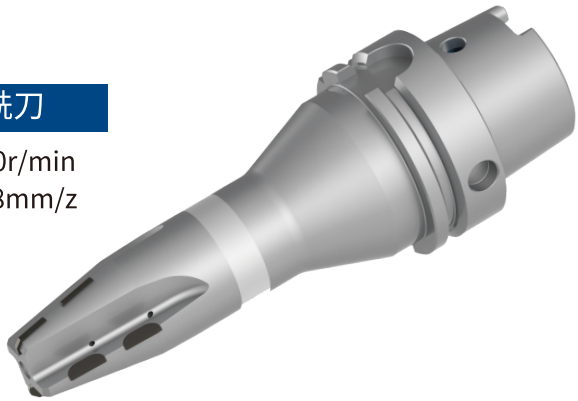

成型锪刀

S=4500r/min
fz=0.10mm/z

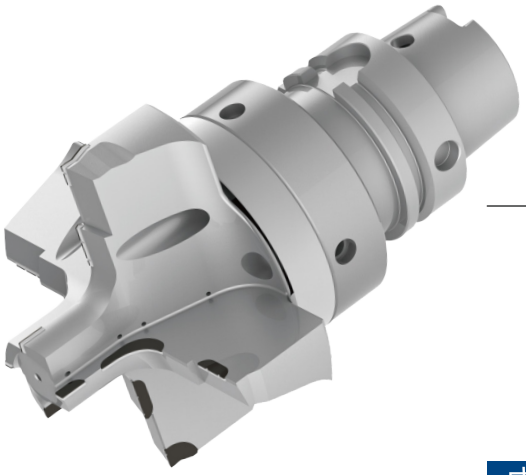

成型套铣刀

S=4200r/min
fz=0.13mm/z

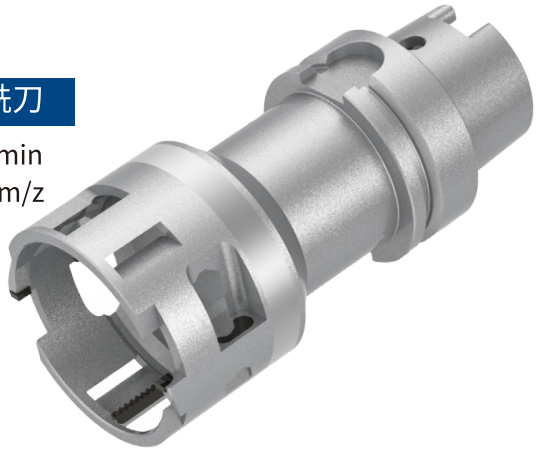

阶梯钻铰刀

S=4000r/min
fz=0.10mm/z

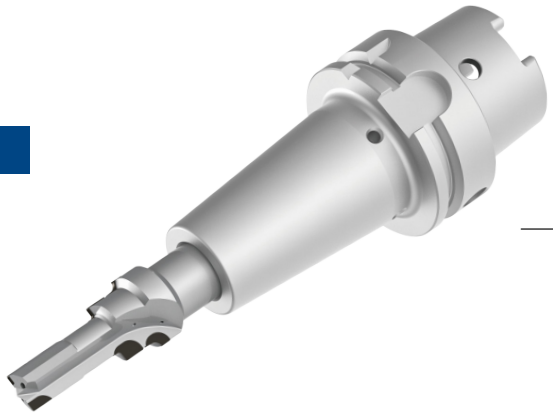

铝制工件加工

Aluminium Products

PCD NON-STANDARD TOOLS

For Auto Parts

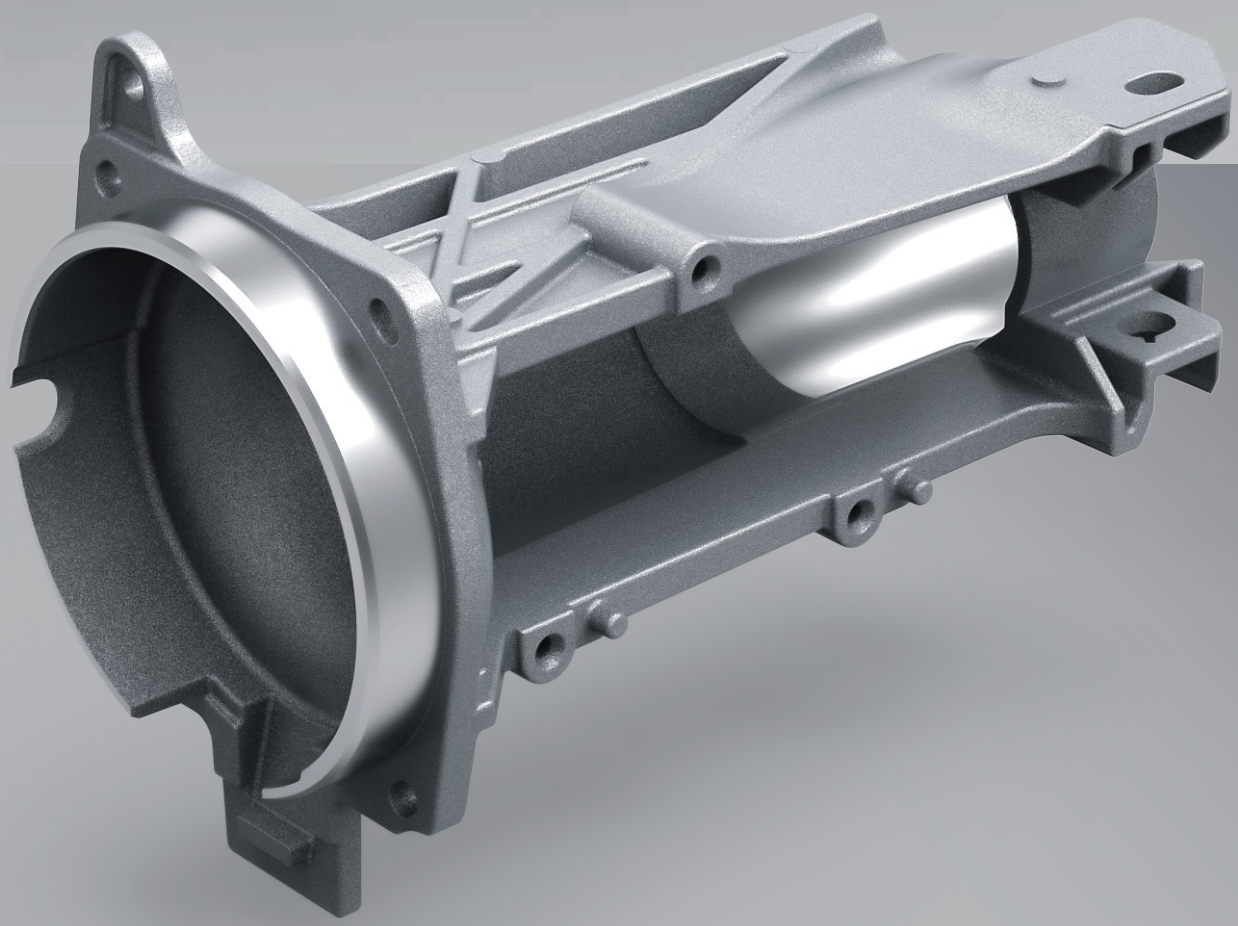

反铣刀

S=8000r/min
fz=0.05mm/z

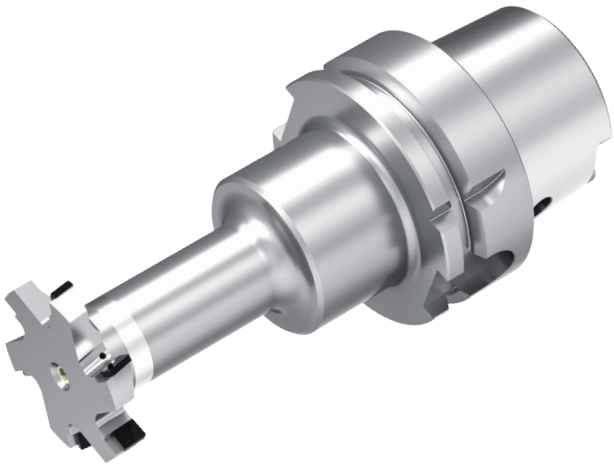

可调精镗刀

S=8000r/min
fz=0.035mm/z

三面刃铣刀

S=8000r/min
fz=0.065mm/z

涡旋盘加工

Scroll Plate

PCD NON-STANDARD TOOLS

For Auto Parts

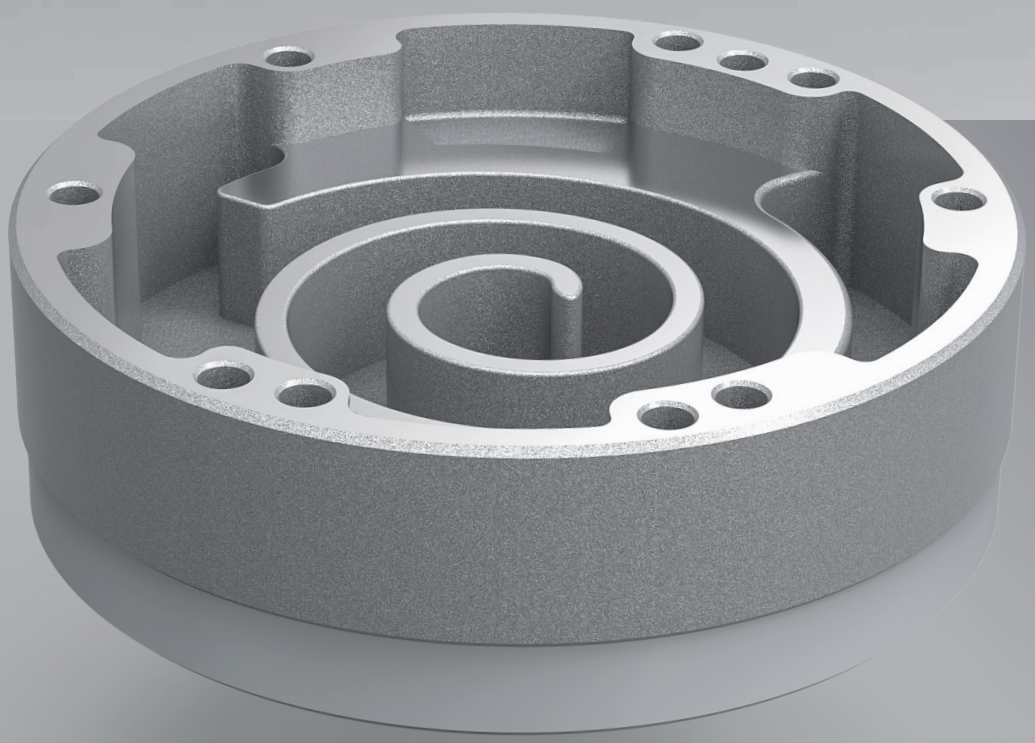

钻铰刀

S=4500r/min
fz=0.05mm/z

侧面铣刀

S=39800r/min
fz=0.10mm/z

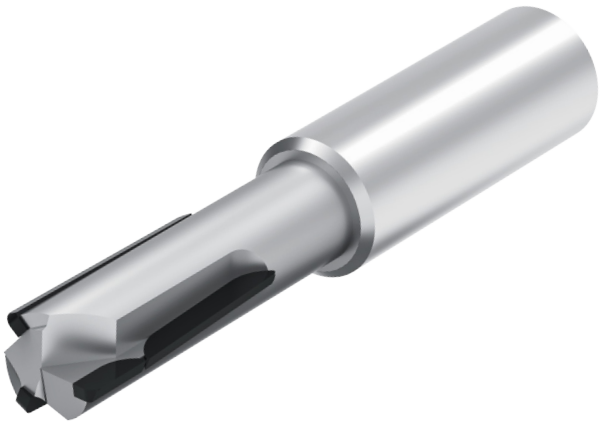

玉米铣刀

S=39800r/min
fz=0.05mm/z

玉米铣刀
Milling Cutter

PCD NON-STANDARD TOOLS
For Auto Parts

有槽玉米铣刀

S=6000r/min
fz=0.15mm/z

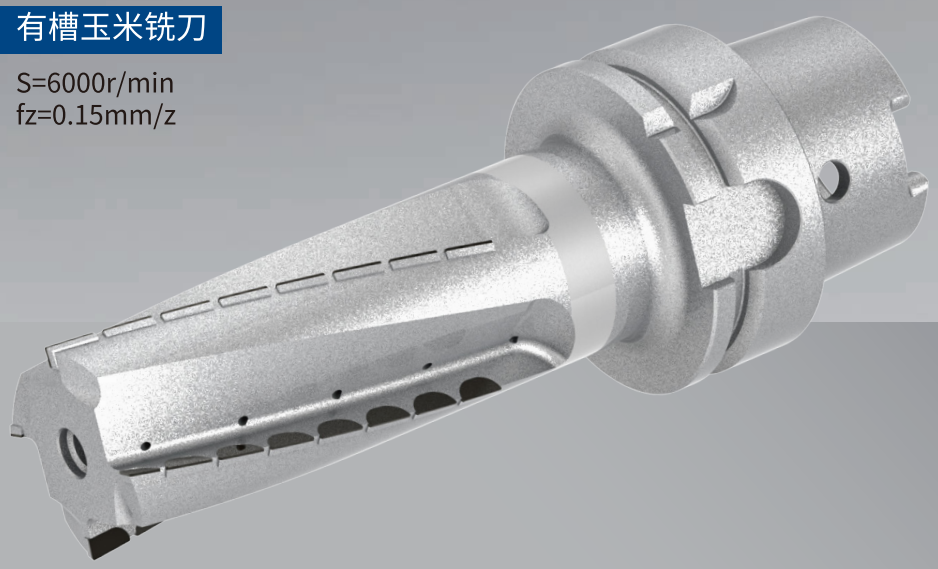

无槽玉米铣刀

S=8000r/min
fz=0.12mm/z

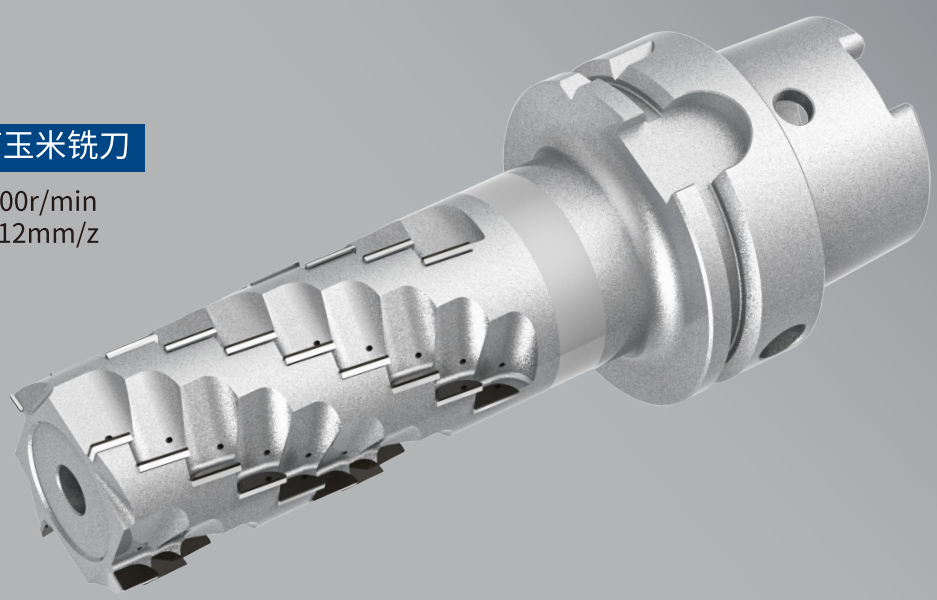

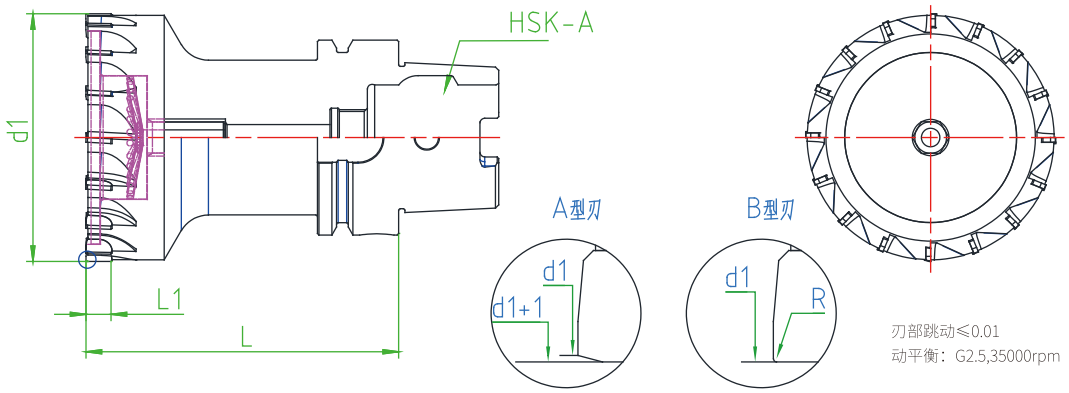

型号	刃形	规格	D1	L1	L	Z	max RPM
HSK-A63	A	D50*8*SD63*SL100	50	8	100	12	30000
HSK-A63	A	D63*8*SD63*SL100	63	8	100	14	24000
HSK-A63	A	D80*8*SD63*SL100	80	8	100	16	20000
HSK-A63	A	D100*8*SD63*SL100	100	8	100	18	15000
HSK-A63	A	D125*8*SD63*SL100	125	8	100	22	12000
HSK-A63	B	D50*8*SD63*SL100	50	8	100	12	30000
HSK-A63	B	D63*8*SD63*SL100	63	8	100	14	24000
HSK-A63	B	D80*8*SD63*SL100	80	8	100	16	20000
HSK-A63	B	D100*8*SD63*SL100	100	8	100	18	15000
HSK-A63	B	D125*8*SD63*SL100	125	8	100	22	12000

定制尺寸

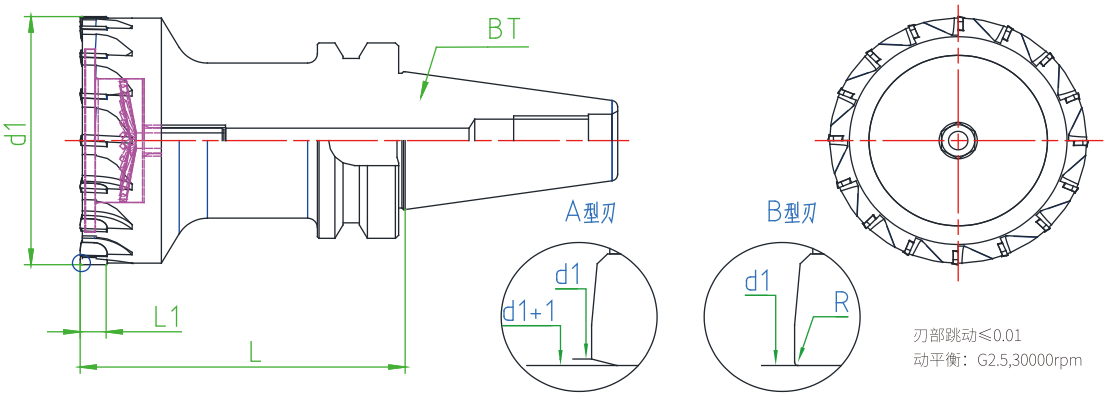

型号	刃形	规格	D1	L1	L	Z	max RPM
BT40	A	D50*8*SD40*SL100	50	8	100	12	25000
BT40	A	D63*8*SD40*SL100	63	8	100	14	20000
BT40	A	D80*8*SD40*SL100	80	8	100	16	16000
BT40	A	D100*8*SD40*SL100	100	8	100	18	13000
BT40	A	D125*8*SD40*SL100	125	8	100	22	11000
BT40	B	D50*8*SD40*SL100	50	8	100	12	25000
BT40	B	D63*8*SD40*SL100	63	8	100	14	20000
BT40	B	D80*8*SD40*SL100	80	8	100	16	16000
BT40	B	D100*8*SD40*SL100	100	8	100	18	13000
BT40	B	D125*8*SD40*SL100	125	8	100	22	11000

定制尺寸

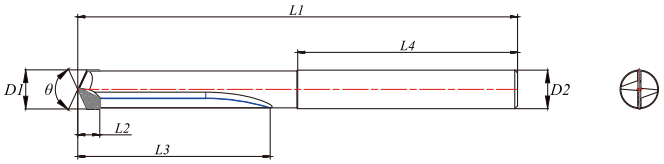

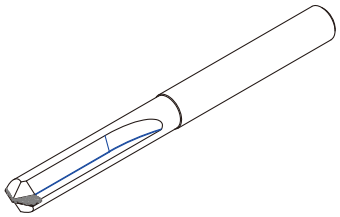

PCD直槽钻头——公制

型号	规格	D1	L1	D2	L	α	刀粒材质
RD1CR00SW-121R	D4*25*SD4*SL65	4	25	4	65	130°	PCD
RD1CR00SW-121R	D5*25*SD6*SL65	5	25	6	65	130°	PCD
RD1CR00SW-121R	D6*25*SD6*SL65	6	25	6	65	130°	PCD
RD1CR00SW-121R	D8*35*SD8*SL82	8	35	8	82	130°	PCD
RD1CR00SW-121R	D10*35*SD10*SL82	10	35	10	82	130°	PCD
RD1CR00SW-121R	D12*35*SD12*SL82	12	35	12	82	130°	PCD
RD1CR00SW-121R	D14*45*SD14*SL108	14	45	14	108	130°	PCD
RD1CR00SW-121R	D16*45*SD16*SL108	16	45	16	108	130°	PCD
RD1CR00SW-121R	D18*45*SD18*SL108	18	45	18	108	130°	PCD
RD1CR00SW-121R	D20*50*SD20*SL108	20	50	20	108	130°	PCD

定制尺寸

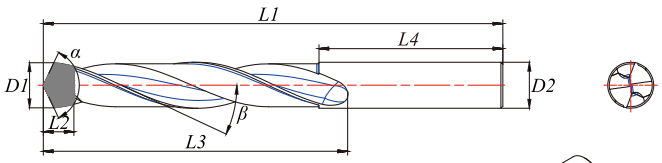

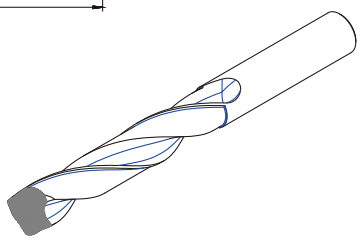

加工工件

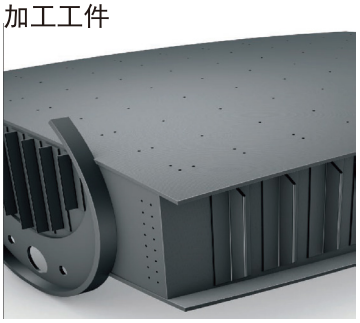

PCD整体式钻头——公制

型号	规格	D1	L1	D2	L	α	β	刀粒材质
RD1CR00SW-121R	D2.5*25*SD4*SL57	2.5	25	4	57	130°	30°	PCD
RD1CR00SW-121R	D3.0*25*SD4*SL57	3.0	25	4	57	130°	30°	PCD
RD1CR00SW-121R	D3.5*25*SD4*SL57	3.5	25	4	57	130°	30°	PCD
RD1CR00SW-121R	D4.0*25*SD4*SL57	4.0	25	4	57	130°	30°	PCD
RD1CR00SW-121R	D4.5*30*SD6*SL68	4.5	30	6	68	130°	30°	PCD
RD1CR00SW-121R	D5.0*30*SD6*SL68	5.0	30	6	68	130°	30°	PCD
RD1CR00SW-121R	D5.5*30*SD6*SL68	5.5	30	6	68	130°	30°	PCD
RD1CR00SW-121R	D6.0*30*SD6*SL68	6.0	30	6	68	130°	30°	PCD
RD1CR00SW-121R	D6.5*35*SD8*SL86	6.5	35	8	86	130°	30°	PCD
RD1CR00SW-121R	D7.0*35*SD8*SL86	7.0	35	8	86	130°	30°	PCD
RD1CR00SW-121R	D7.5*35*SD8*SL86	7.5	35	8	86	130°	30°	PCD
RD1CR00SW-121R	D8.0*35*SD8*SL86	8.0	35	8	86	130°	30°	PCD

定制尺寸

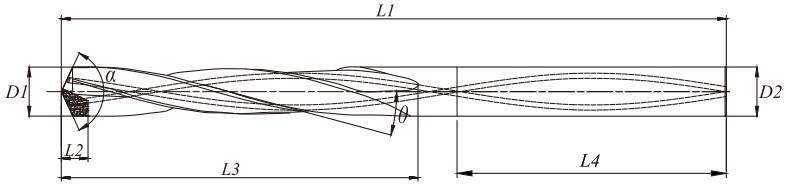

加工工件

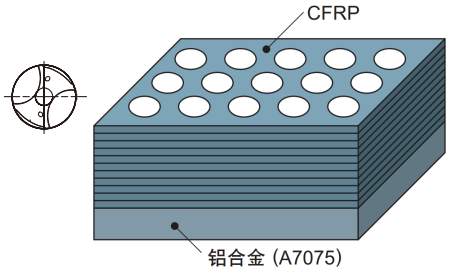

PCD麻花钻头——公制（有内冷）

型号	规格	D1	L1	D2	L	α	β	刀粒材质
RD1CRAMSW-121R	D4*25*SD4*SL65	4	25	4	65	130°	15°	PCD
RD1CRAMSW-121R	D5*25*SD6*SL65	5	25	6	65	130°	15°	PCD
RD1CRAMSW-121R	D6*25*SD6*SL65	6	25	6	65	130°	15°	PCD
RD1CRAMSW-121R	D8*35*SD8*SL82	8	35	8	82	130°	15°	PCD
RD1CRAMSW-121R	D10*35*SD10*SL82	10	35	10	82	130°	15°	PCD
RD1CRAMSW-121R	D12*35*SD12*SL82	12	35	12	82	130°	15°	PCD
RD1CRAMSW-121R	D14*45*SD14*SL108	14	45	14	108	130°	15°	PCD
RD1CRAMSW-121R	D16*45*SD16*SL108	16	45	16	108	130°	15°	PCD
RD1CRAMSW-121R	D18*45*SD18*SL108	18	45	18	108	130°	15°	PCD
RD1CRAMSW-121R	D20*50*SD20*SL108	20	50	20	108	130°	15°	PCD

定制尺寸

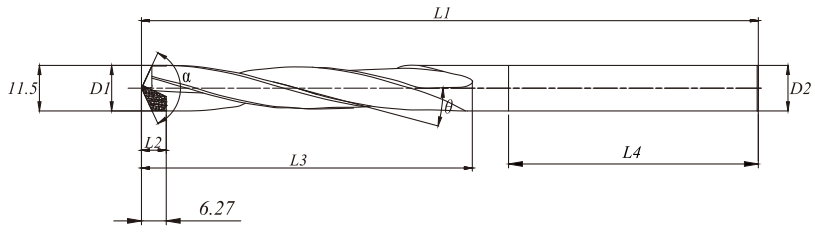

加工工件

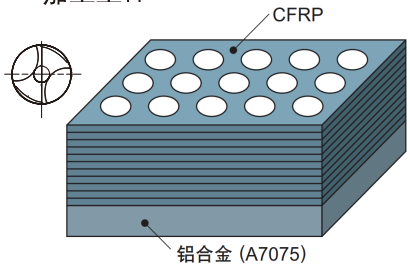

PCD麻花钻头——公制（无内冷）

型号	规格	D1	L1	D2	L	α	β	刀粒材质
RD1CR00SW-121R	D4*25*SD4*SL65	4	25	4	65	130°	15°	PCD
RD1CR00SW-121R	D5*25*SD6*SL65	5	25	6	65	130°	15°	PCD
RD1CR00SW-121R	D6*25*SD6*SL65	6	25	6	65	130°	15°	PCD
RD1CR00SW-121R	D8*35*SD8*SL82	8	35	8	82	130°	15°	PCD
RD1CR00SW-121R	D10*35*SD10*SL82	10	35	10	82	130°	15°	PCD
RD1CR00SW-121R	D12*35*SD12*SL82	12	35	12	82	130°	15°	PCD
RD1CR00SW-121R	D14*45*SD14*SL108	14	45	14	108	130°	15°	PCD
RD1CR00SW-121R	D16*45*SD16*SL108	16	45	16	108	130°	15°	PCD
RD1CR00SW-121R	D18*45*SD18*SL108	18	45	18	108	130°	15°	PCD
RD1CR00SW-121R	D20*50*SD20*SL108	20	50	20	108	130°	15°	PCD

定制尺寸

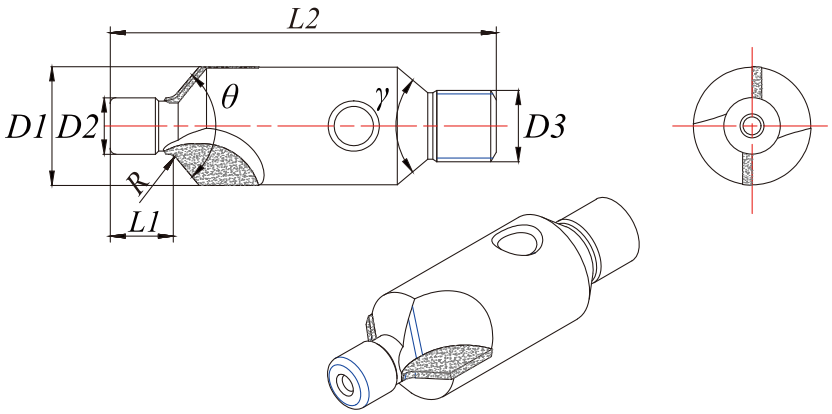

加工工件

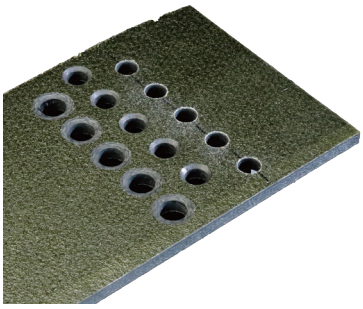

PCD锪窝钻——公制

型号	规格	D1	L1	D2	α	L2	β	D3	R	Z	刀粒材质
RP1TRRSPC-122R	D4.14*7.5*D10-A100*36	4.140	7.5	10	100°	36	120°	1/4--28	0.9	2	PCD
RP1TRRSPC-122R	D4.14*7.5*D10-A130*36	4.140	7.5	10	130°	36	120°	1/4--28	0.6	2	PCD
RP1TRRSPC-122R	D4.8*7.5*D10-A100*36.58	4.800	7.5	10	100°	36.58	120°	1/4--28	0.9	2	PCD
RP1TRRSPC-122R	D4.8*7.5*D10-A130*36.58	4.800	7.5	10	130°	36.58	120°	1/4--28	0.6	2	PCD
RP1TRRSPC-122R	D5.53*7.5*D10-A100*36.58	5.530	7.5	10	100°	36.58	120°	1/4--28	0.9	2	PCD
RP1TRRSPC-122R	D5.53*7.5*D10-A130*36.58	5.530	7.5	10	130°	36.58	120°	1/4--28	0.6	2	PCD
RP1TRRSPC-122R	D6.32*7.5*D14-A100*37.82	6.320	7.5	14	100°	37.82	120°	1/4--28	0.9	2	PCD
RP1TRRSPC-122R	D6.32*7.5*D14-A130*37.82	6.320	7.5	14	130°	37.82	120°	1/4--28	0.6	2	PCD
RP1TRRSPC-122R	D7.91*7.5*D18-A100*39.73	7.910	7.5	18	100°	39.73	120°	1/4--28	1.15	2	PCD
RP1TRRSPC-122R	D7.91*7.5*D18-A130*39.73	7.910	7.5	18	130°	39.73	120°	1/4--28	0.9	2	PCD
RP1TRRSPC-122R	D9.5*8.5*D20-A100*49.5	9.500	8.5	20	100°	49.5	120°	3/4--24	1.15	2	PCD
RP1TRRSPC-122R	D9.5*8.5*D20-A130*49.5	9.500	8.5	20	130°	49.5	120°	3/4--24	0.9	2	PCD
RP1TRRSPC-122R	D11.09*8.5*D23-A100*51	11.090	8.5	23	100°	51	120°	3/4--24	1.4	2	PCD
RP1TRRSPC-122R	D11.09*8.5*D23-A130*51	11.090	8.5	23	130°	51	120°	3/4--24	1.2	2	PCD
RP1TRRSPC-122R	D12.68*8.5*D26-A100*49	12.680	8.5	26	100°	49	120°	3/4--24	1.4	2	PCD
RP1TRRSPC-122R	D12.68*8.5*D26-A130*49	12.680	8.5	26	130°	49	120°	3/4--24	1.2	2	PCD

定制尺寸

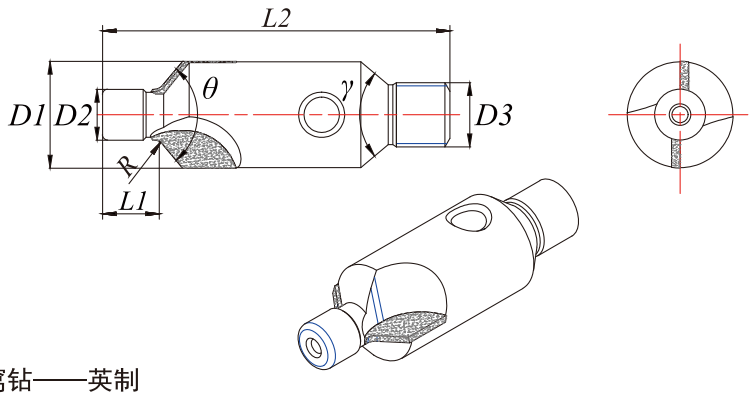

加工工件

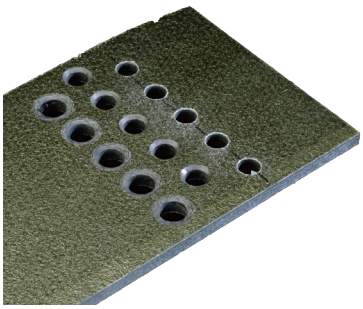

PCD锪窝钻——英制

型号	规格	D1	L1	D2	α	L2	β	D3	R	Z	刀粒材质
RP1TRRSPC-122R	D4.8*7.62*D9.525-A100*25.4	4.800	7.62	9.525	100°	25.4	120°	1/4--28	1	2	PCD
RP1TRRSPC-122R	D6.299*15.24*D13.97-A100*38.1	6.299	15.24	13.970	100°	38.1	120°	1/4--28	1	2	PCD
RP1TRRSPC-122R	D6.578*7.62*D13.97-A130*25.4	6.578	7.62	13.970	130°	25.4	120°	1/4--28	1	2	PCD
RP1TRRSPC-122R	D9.525*7.62*D22.225-A100*38.1	9.525	7.62	22.225	100°	38.1	120°	3/8--24	1	2	PCD
RP1TRRSPC-122R	D9.525*7.62*D22.225-A130*38.1	9.525	7.62	22.225	130°	38.1	120°	3/8--24	1	2	PCD
RP1TRRSPC-122R	D7.925*7.62*D22.225-A130*38.1	7.925	7.62	22.225	130°	38.1	120°	3/8--24	1	2	PCD
RP1TRRSPC-122R	D7.925*7.62*D22.225-A100*38.1	7.925	7.62	22.225	100°	38.1	120°	3/8--24	1	2	PCD

定制尺寸

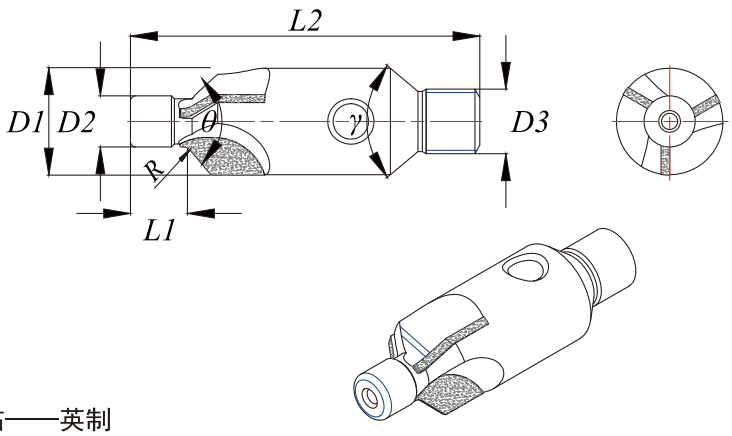

加工工件

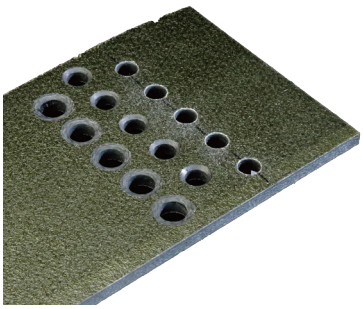

PCD锪窝钻——英制

型号	规格	D1	L1	D2	α	L2	β	D3	R	Z	刀粒材质
RP1TRRSPC-133R	D4.8*7.62*D9.525-A100*25.4	4.800	7.62	9.525	100°	25.4	120°	1/4--28	1	3	PCD
RP1TRRSPC-133R	D6.299*15.24*D13.97-A100*38.1	6.299	15.24	13.970	100°	38.1	120°	1/4--28	1	3	PCD
RP1TRRSPC-133R	D6.578*7.62*D13.97-A130*25.4	6.578	7.62	13.970	130°	25.4	120°	1/4--28	1	3	PCD
RP1TRRSPC-133R	D9.525*7.62*D22.225-A100*38.1	9.525	7.62	22.225	100°	38.1	120°	3/8--24	1	3	PCD
RP1TRRSPC-133R	D9.525*7.62*D22.225-A130*38.1	9.525	7.62	22.225	130°	38.1	120°	3/8--24	1	3	PCD
RP1TRRSPC-133R	D7.925*7.62*D22.225-A130*38.1	7.925	7.62	22.225	130°	38.1	120°	3/8--24	1	3	PCD
RP1TRRSPC-133R	D7.925*7.62*D22.225-A100*38.1	7.925	7.62	22.225	100°	38.1	120°	3/8--24	1	3	PCD

定制尺寸

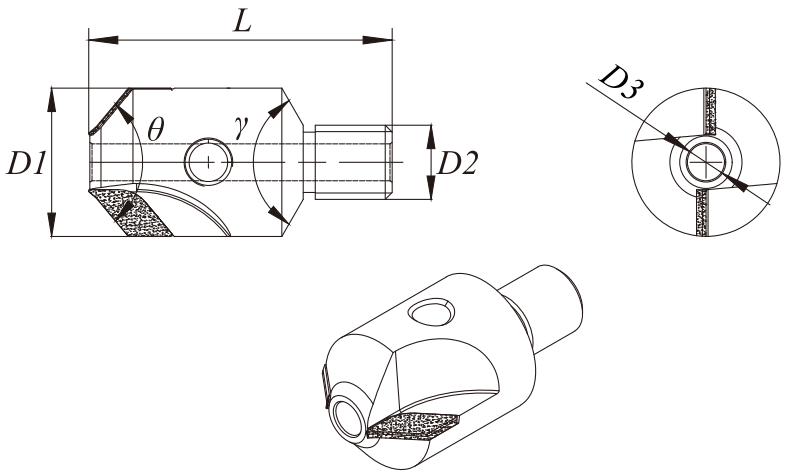

加工工件

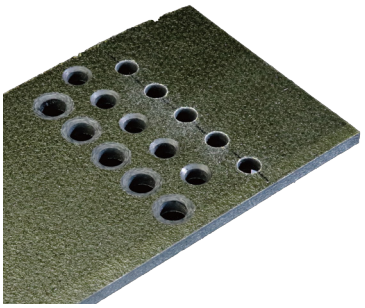

带销孔PCD锪窝钻——英制

型号	规格	D1	D3	α	L	D2	β	Z	刀粒材质
RP1TR00PC-122R	D10*D2-A100*28	10	2	100°	28	1/4-28 UNF	120°	2	PCD
RP1TR00PC-122R	D10*D2.5-A100*28	10	2.5	100°	28	1/4-28 UNF	120°	2	PCD
RP1TR00PC-122R	D10*D3-A100*28	10	3	100°	28	1/4-28 UNF	120°	2	PCD
RP1TR00PC-122R	D10*D3.5-A100*28	10	3.5	100°	28	1/4-28 UNF	120°	2	PCD
RP1TR00PC-122R	D14*D2.5-A100*28	14	2.5	100°	28	1/4-28 UNF	120°	2	PCD
RP1TR00PC-122R	D14*D3-A100*28	14	3	100°	28	1/4-28 UNF	120°	2	PCD
RP1TR00PC-122R	D14*D3.5-A100*28	14	3.5	100°	28	1/4-28 UNF	120°	2	PCD
RP1TR00PC-122R	D14*D4-A100*28	14	4	100°	28	1/4-28 UNF	120°	2	PCD
RP1TR00PC-122R	D17*D3-A100*28	17	3	100°	28	1/4-28 UNF	120°	2	PCD
RP1TR00PC-122R	D17*D3.5-A100*28	17	3.5	100°	28	1/4-28 UNF	120°	2	PCD
RP1TR00PC-122R	D17*D4-A100*28	17	4	100°	28	1/4-28 UNF	120°	2	PCD
RP1TR00PC-122R	D17*D5-A100*28	17	5	100°	28	1/4-28 UNF	120°	2	PCD
RP1TR00PC-122R	D21*D3.5-A100*28	21	3.5	100°	28	1/4-28 UNF	120°	2	PCD
RP1TR00PC-122R	D21*D4-A100*28	21	4	100°	28	1/4-28 UNF	120°	2	PCD
RP1TR00PC-122R	D21*D5-A100*28	21	5	100°	28	1/4-28 UNF	120°	2	PCD
RP1TR00PC-122R	D22.225*D6-A100*28	22.225	6	100°	28	1/4-28 UNF	120°	2	PCD
RP1TR00PC-122R	D25.4*D6-A100*28	25.4	6	100°	28	1/4-28 UNF	120°	2	PCD
RP1TR00PC-122R	D28.575*D6-A100*28	28.575	6	100°	28	1/4-28 UNF	120°	2	PCD
RP1TR00PC-122R	D31.75*D6-A100*28	31.75	6	100°	28	1/4-28 UNF	120°	2	PCD
RP1TR00PC-122R	D34.925*D6-A100*28	34.925	6	100°	28	1/4-28 UNF	120°	2	PCD
RP1TR00PC-122R	D38.1*D6-A100*28	38.1	6	100°	28	1/4-28 UNF	120°	2	PCD

定制尺寸

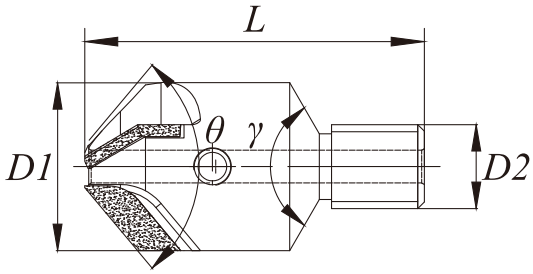

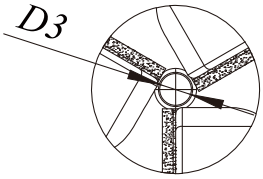

加工工件

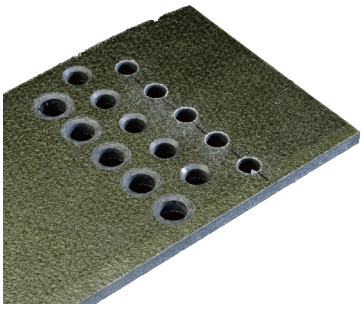

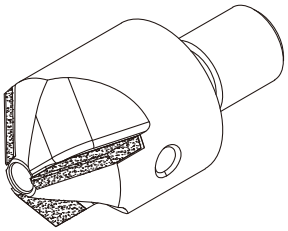

带销孔PCD锪窝钻——英制

型号	规格	D1	D3	α	L	D2	β	Z	刀粒材质
RP1TR00PC-133R	D10*D2-A100*28	10	2	100°	28	1/4-28 UNF	120°	3	PCD
RP1TR00PC-133R	D10*D2.5-A100*28	10	2.5	100°	28	1/4-28 UNF	120°	3	PCD
RP1TR00PC-133R	D10*D3-A100*28	10	3	100°	28	1/4-28 UNF	120°	3	PCD
RP1TR00PC-133R	D10*D3.5-A100*28	10	3.5	100°	28	1/4-28 UNF	120°	3	PCD
RP1TR00PC-133R	D14*D2.5-A100*28	14	2.5	100°	28	1/4-28 UNF	120°	3	PCD
RP1TR00PC-133R	D14*D3-A100*28	14	3	100°	28	1/4-28 UNF	120°	3	PCD
RP1TR00PC-133R	D14*D3.5-A100*28	14	3.5	100°	28	1/4-28 UNF	120°	3	PCD
RP1TR00PC-133R	D14*D4-A100*28	14	4	100°	28	1/4-28 UNF	120°	3	PCD
RP1TR00PC-133R	D17*D3-A100*28	17	3	100°	28	1/4-28 UNF	120°	3	PCD
RP1TR00PC-133R	D17*D3.5-A100*28	17	3.5	100°	28	1/4-28 UNF	120°	3	PCD
RP1TR00PC-133R	D17*D4-A100*28	17	4	100°	28	1/4-28 UNF	120°	3	PCD
RP1TR00PC-133R	D17*D5-A100*28	17	5	100°	28	1/4-28 UNF	120°	3	PCD
RP1TR00PC-133R	D21*D3.5-A100*28	21	3.5	100°	28	1/4-28 UNF	120°	3	PCD
RP1TR00PC-133R	D21*D4-A100*28	21	4	100°	28	1/4-28 UNF	120°	3	PCD
RP1TR00PC-133R	D21*D5-A100*28	21	5	100°	28	1/4-28 UNF	120°	3	PCD
RP1TR00PC-133R	D22.225*D6-A100*28	22.225	6	100°	28	1/4-28 UNF	120°	3	PCD
RP1TR00PC-133R	D25.4*D6-A100*28	25.4	6	100°	28	1/4-28 UNF	120°	3	PCD
RP1TR00PC-133R	D28.575*D6-A100*28	28.575	6	100°	28	1/4-28 UNF	120°	3	PCD
RP1TR00PC-133R	D31.75*D6-A100*28	31.75	6	100°	28	1/4-28 UNF	120°	3	PCD
RP1TR00PC-133R	D34.925*D6-A100*28	34.925	6	100°	28	1/4-28 UNF	120°	3	PCD
RP1TR00PC-133R	D38.1*D6-A100*28	38.1	6	100°	28	1/4-28 UNF	120°	3	PCD

定制尺寸

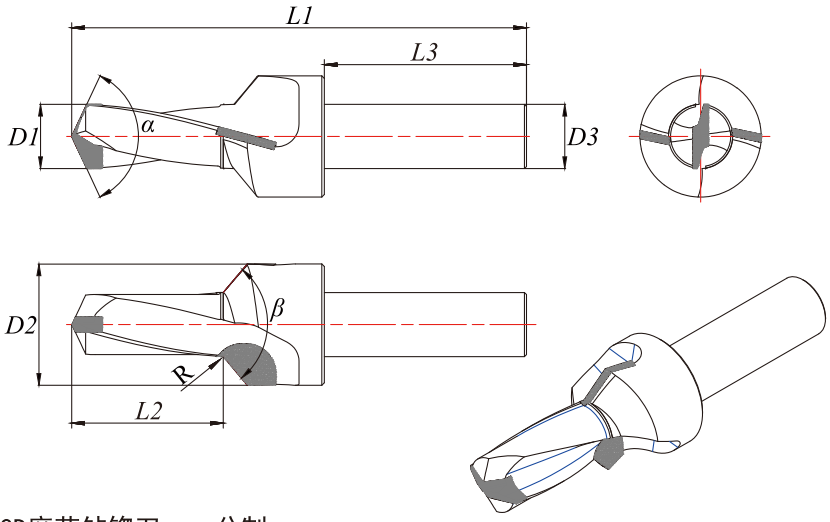

加工工件

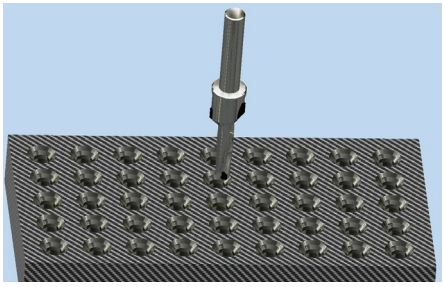

PCD麻花钻锪刀——公制

型号	规格	D1	L2	D2	D3	L1	α	β	γ	L3	Z	刀粒材质
RD1CR00SW-122R	D4*30*D10*SD8*SL90	4	30	10	8	90	120°	100°	15°	40	2	PCD
RD1CR00SW-122R	D5*30*D12*SD10*SL90	5	30	12	10	90	120°	100°	15°	40	2	PCD
RD1CR00SW-122R	D6*30*D14*SD12*SL90	6	30	14	12	90	120°	100°	15°	40	2	PCD
RD1CR00SW-122R	D8*30*D18*SD16*SL90	8	30	18	16	90	120°	100°	15°	40	2	PCD
RD1CR00SW-122R	D10*30*D20*SD18*SL90	10	30	20	18	90	120°	100°	15°	40	2	PCD
RD1CR00SW-122R	D12*30*D22*SD20*SL90	12	30	22	20	90	120°	100°	15°	40	2	PCD

定制尺寸

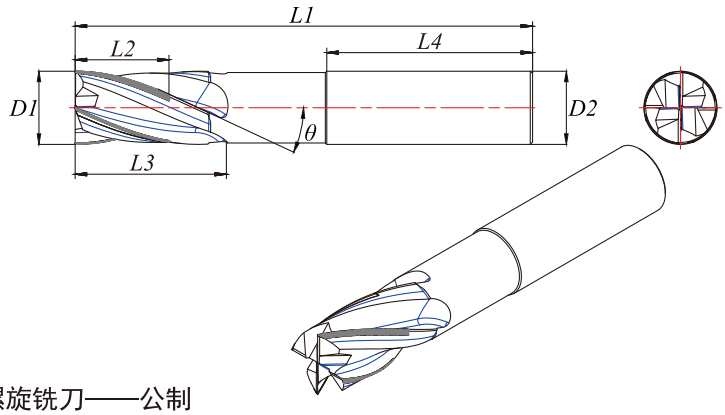

加工工件

PCD螺旋铣刀——公制

型号	规格	D1	L2	D2	L1	L4	α	Z	刀粒材质
RE1CR00SW-144R	D6*20*SD6*SL80	6	20	6	80	45	15° /30°	4	PCD
RE1CR00SW-144R	D8*20*SD8*SL80	8	20	8	80	45	15° /30°	4	PCD
RE1CR00SW-144R	D10*20*SD10*SL80	10	20	10	80	45	15° /30°	4	PCD
RE1CR00SW-144R	D12*20*SD12*SL100	12	20	12	100	45	15° /30°	4	PCD
RE1CR00SW-144R	D14*20*SD16*SL100	14	20	16	100	45	15° /30°	4	PCD
RE1CR00SW-144R	D16*20*SD16*SL100	16	20	16	100	45	15° /30°	4	PCD
RE1CR00SW-144R	D20*25*SD20*SL110	20	25	20	110	50	15° /30°	4	PCD

定制尺寸

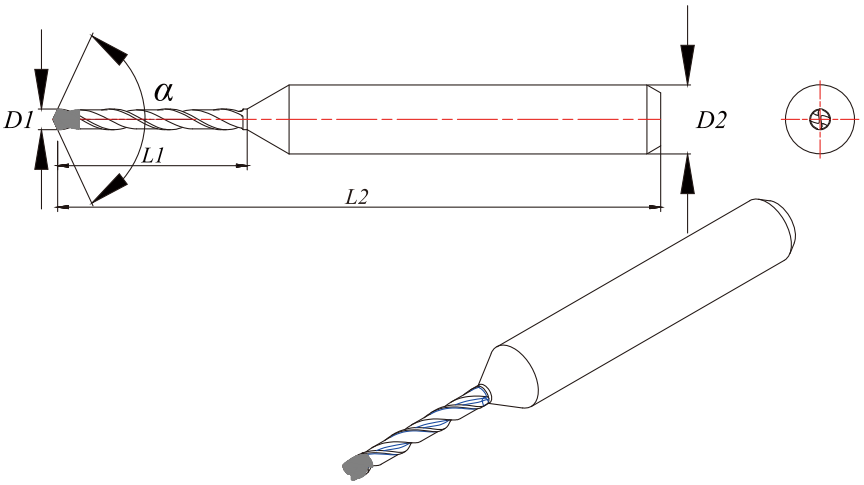

加工工件

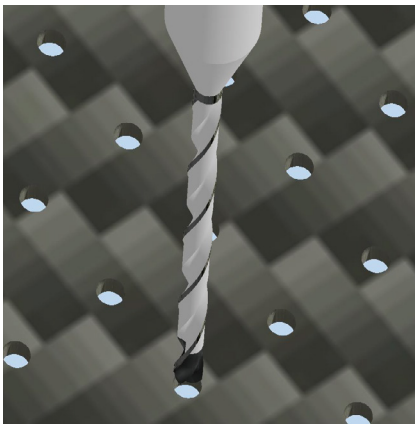

PCD超小钻头——英制

型号	规格	D1	L1	D2	L2	α	刀粒材质
RD1CR00SW-122R	D0.40*8*SD3.175*SL38	0.40	8	3.175	38	130°	PCD
RD1CR00SW-122R	D0.45*8*SD3.175*SL38	0.45	8	3.175	38	130°	PCD
RD1CR00SW-122R	D0.50*8*SD3.175*SL38	0.50	8	3.175	38	130°	PCD
RD1CR00SW-122R	D0.55*8*SD3.175*SL38	0.55	8	3.175	38	130°	PCD
RD1CR00SW-122R	D0.60*8*SD3.175*SL38	0.60	8	3.175	38	130°	PCD
RD1CR00SW-122R	D0.65*8*SD3.175*SL38	0.65	8	3.175	38	130°	PCD
RD1CR00SW-122R	D0.70*8*SD3.175*SL38	0.70	8	3.175	38	130°	PCD
RD1CR00SW-122R	D0.75*8*SD3.175*SL38	0.75	8	3.175	38	130°	PCD
RD1CR00SW-122R	D0.80*8*SD3.175*SL38	0.80	8	3.175	38	130°	PCD
RD1CR00SW-122R	D0.85*8*SD3.175*SL38	0.85	8	3.175	38	130°	PCD
RD1CR00SW-122R	D0.90*8*SD3.175*SL38	0.90	8	3.175	38	130°	PCD
RD1CR00SW-122R	D0.95*8*SD3.175*SL38	0.95	8	3.175	38	130°	PCD
RD1CR00SW-122R	D1.0*8*SD3.175*SL38	1.00	8	3.175	38	130°	PCD
RD1CR00SW-122R	D1.1*11*SD3.175*SL38	1.10	11	3.175	38	130°	PCD
RD1CR00SW-122R	D1.2*11*SD3.175*SL38	1.20	11	3.175	38	130°	PCD
RD1CR00SW-122R	D1.3*11*SD3.175*SL38	1.30	11	3.175	38	130°	PCD
RD1CR00SW-122R	D1.4*11*SD3.175*SL38	1.40	11	3.175	38	130°	PCD
RD1CR00SW-122R	D1.5*11*SD3.175*SL38	1.50	11	3.175	38	130°	PCD
RD1CR00SW-122R	D1.6*11*SD3.175*SL38	1.60	11	3.175	38	130°	PCD
RD1CR00SW-122R	D1.7*11*SD3.175*SL38	1.70	11	3.175	38	130°	PCD
RD1CR00SW-122R	D1.8*11*SD3.175*SL38	1.80	11	3.175	38	130°	PCD
RD1CR00SW-122R	D1.9*11*SD3.175*SL38	1.90	11	3.175	38	130°	PCD
RD1CR00SW-122R	D2.0*11*SD3.175*SL38	2.00	11	3.175	38	130°	PCD
RD1CR00SW-122R	D2.1*11*SD3.175*SL38	2.10	11	3.175	38	130°	PCD
RD1CR00SW-122R	D2.2*11*SD3.176*SL38	2.20	11	3.175	38	130°	PCD
RD1CR00SW-122R	D2.3*11*SD3.175*SL38	2.30	11	3.175	38	130°	PCD
RD1CR00SW-122R	D2.4*11*SD3.175*SL38	2.40	11	3.175	38	130°	PCD
RD1CR00SW-122R	D2.5*11*SD3.175*SL38	2.50	11	3.175	38	130°	PCD

定制尺寸

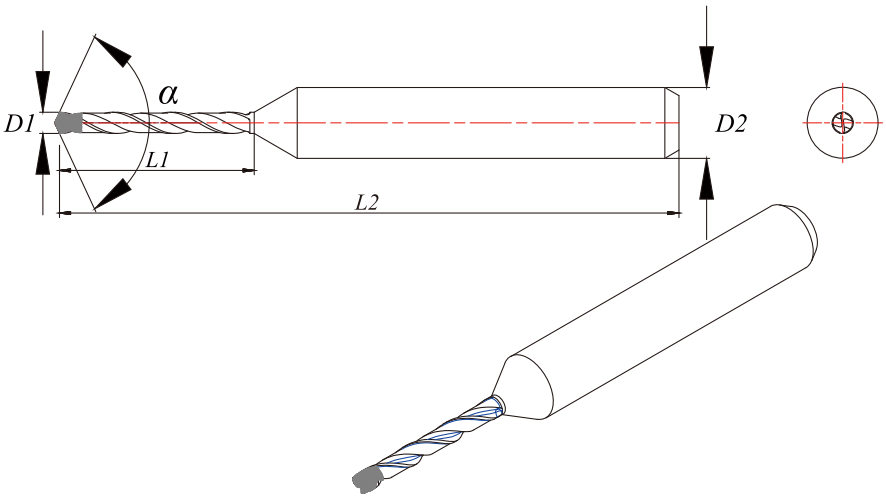

加工工件

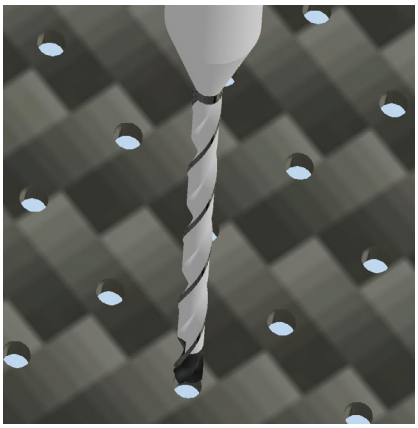

PCD超小钻头——公制

型号	规格	D1	L1	D2	L2	α	刀粒材质
RD1CR00SW-122R	D0.40*8*SD4*SL38	0.40	8	4	38	130°	PCD
RD1CR00SW-122R	D0.45*8*SD4*SL38	0.45	8	4	38	130°	PCD
RD1CR00SW-122R	D0.50*8*SD4*SL38	0.50	8	4	38	130°	PCD
RD1CR00SW-122R	D0.55*8*SD4*SL38	0.55	8	4	38	130°	PCD
RD1CR00SW-122R	D0.60*8*SD4*SL38	0.60	8	4	38	130°	PCD
RD1CR00SW-122R	D0.65*8*SD4*SL38	0.65	8	4	38	130°	PCD
RD1CR00SW-122R	D0.70*8*SD4*SL38	0.70	8	4	38	130°	PCD
RD1CR00SW-122R	D0.75*8*SD4*SL38	0.75	8	4	38	130°	PCD
RD1CR00SW-122R	D0.80*8*SD4*SL38	0.80	8	4	38	130°	PCD
RD1CR00SW-122R	D0.85*8*SD4*SL38	0.85	8	4	38	130°	PCD
RD1CR00SW-122R	D0.90*8*SD4*SL38	0.90	8	4	38	130°	PCD
RD1CR00SW-122R	D0.95*8*SD4*SL38	0.95	8	4	38	130°	PCD
RD1CR00SW-122R	D1.0*8*SD4*SL38	1.00	8	4	38	130°	PCD
RD1CR00SW-122R	D1.1*11*SD4*SL38	1.10	11	4	38	130°	PCD
RD1CR00SW-122R	D1.2*11*SD4*SL38	1.20	11	4	38	130°	PCD
RD1CR00SW-122R	D1.3*11*SD4*SL38	1.30	11	4	38	130°	PCD
RD1CR00SW-122R	D1.4*11*SD4*SL38	1.40	11	4	38	130°	PCD
RD1CR00SW-122R	D1.5*11*SD4*SL38	1.50	11	4	38	130°	PCD
RD1CR00SW-122R	D1.6*11*SD4*SL38	1.60	11	4	38	130°	PCD
RD1CR00SW-122R	D1.7*11*SD4*SL38	1.70	11	4	38	130°	PCD
RD1CR00SW-122R	D1.8*11*SD4*SL38	1.80	11	4	38	130°	PCD
RD1CR00SW-122R	D1.9*11*SD4*SL38	1.90	11	4	38	130°	PCD
RD1CR00SW-122R	D2.0*11*SD4*SL38	2.00	11	4	38	130°	PCD
RD1CR00SW-122R	D2.1*11*SD4*SL38	2.10	11	4	38	130°	PCD
RD1CR00SW-122R	D2.2*11*SD4*SL38	2.20	11	4	38	130°	PCD
RD1CR00SW-122R	D2.3*11*SD4*SL38	2.30	11	4	38	130°	PCD
RD1CR00SW-122R	D2.4*11*SD4*SL38	2.40	11	4	38	130°	PCD
RD1CR00SW-122R	D2.5*11*SD4*SL38	2.50	11	4	38	130°	PCD

定制尺寸

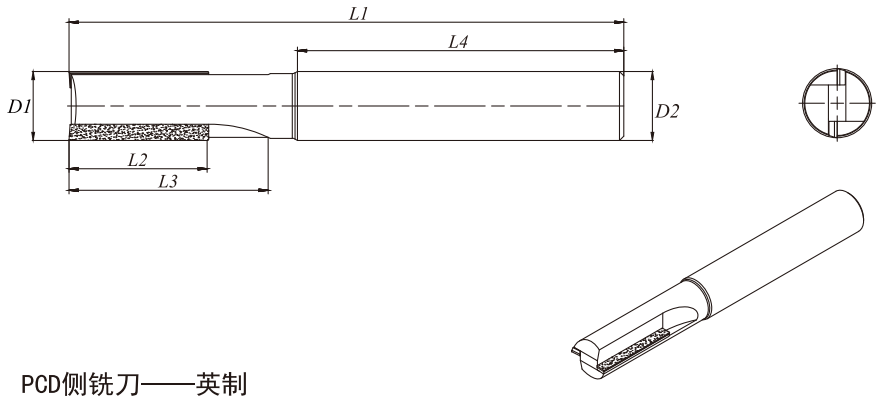

加工工件

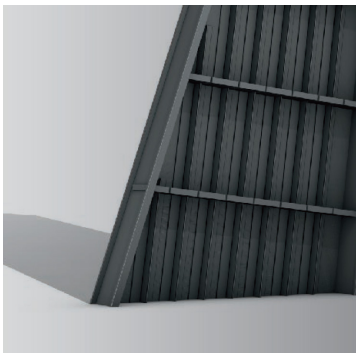

PCD侧铣刀——英制

型号	规格	D1	L2	D2	L1	L3	Z	刀粒材质
RE1CR0000-122R	D4.76*6.35*SD4.76*SL52	4.760	6.35	4.760	52	35	2	PCD
RE1CR0000-122R	D6.35*12.7*SD6.35*SL63.5	6.350	12.7	6.350	63.5	37	2	PCD
RE1CR0000-122R	D9.525*19.05*SD9.525*SL101.6	9.525	19.05	9.525	101.6	61	2	PCD
RE1CR0000-122R	D12.7*25.4*SD12.7*SL102	12.700	25.4	12.700	102	61	2	PCD
RE1CR0000-122R	D19.05*25.4*SD19.05*SL102	19.050	25.4	19.050	102	61	2	PCD

定制尺寸

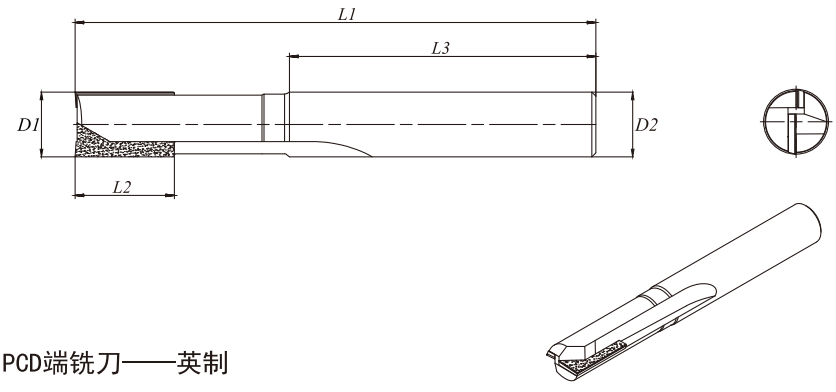

加工工件

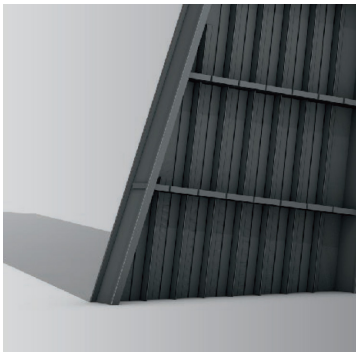

PCD端铣刀——英制

型号	规格	D1	L2	D2	L1	L3	Z	刀粒材质
RE1CR00CC-122R	D4.76*6.35*SD4.76*SL52	4.760	6.35	4.760	52	35	2	PCD
RE1CR00CC-122R	D6.35*12.7*SD6.35*SL63.5	6.350	12.7	6.350	63.5	37	2	PCD
RE1CR00CC-122R	D9.525*19.05*SD9.525*SL101.6	9.525	19.05	9.525	101.6	61	2	PCD
RE1CR00CC-122R	D12.7*25.4*SD12.7*SL102	12.700	25.4	12.700	102	61	2	PCD
RE1CR00CC-122R	D19.05*25.4*SD19.05*SL102	19.050	25.4	19.050	102	61	2	PCD

定制尺寸

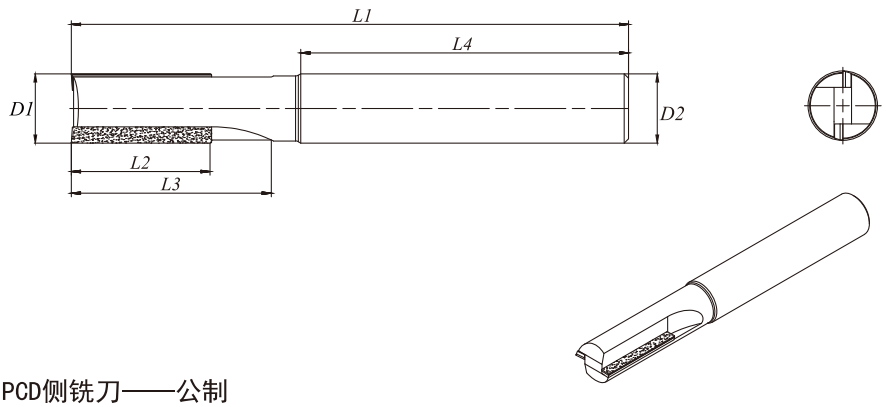

加工工件

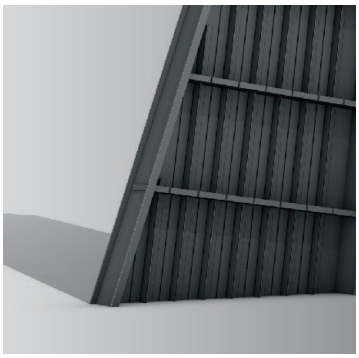

PCD侧铣刀——公制

型号	规格	D1	L2	D2	L1	L3	Z	刀粒材质
RE1CR0000-122R	D6*9*SD6*SL50	6	9	6	50	30	2	PCD
RE1CR0000-122R	D8*12*SD8*SL60	8	12	8	60	30	2	PCD
RE1CR0000-122R	D10*15*SD10*SL80	10	15	10	80	45	2	PCD
RE1CR0000-122R	D12*18*SD12*SL100	12	18	12	100	45	2	PCD
RE1CR0000-122R	D16*25*SD16*SL110	16	25	16	110	55	2	PCD

定制尺寸

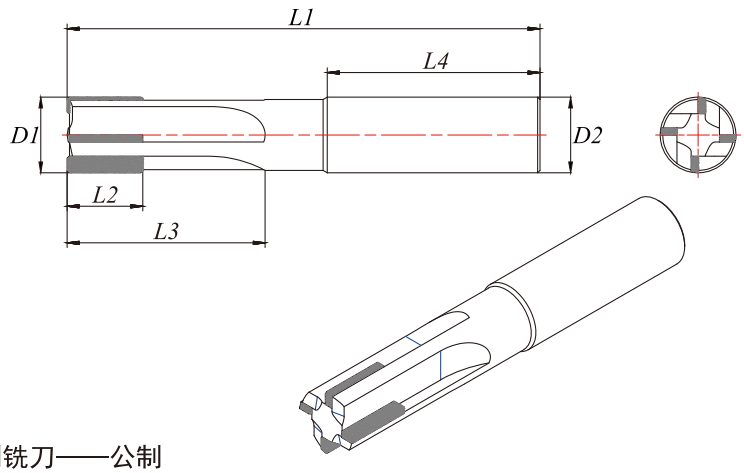

加工工件

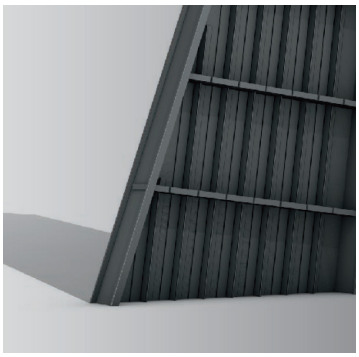

PCD侧铣刀——公制

型号	规格	D1	L2	D2	L1	L3	Z	刀粒材质
RE1CR0000-144R	D10*15*SD10*SL80	10	15	10	80	45	4	PCD
RE1CR0000-144R	D12*18*SD12*SL100	12	18	12	100	45	4	PCD
RE1CR0000-144R	D16*25*SD16*SL110	16	25	16	110	55	4	PCD
RE1CR0000-144R	D18*25*SD18*SL110	18	25	18	110	55	4	PCD
RE1CR0000-144R	D20*30*SD20*SL110	20	30	20	110	55	4	PCD

定制尺寸

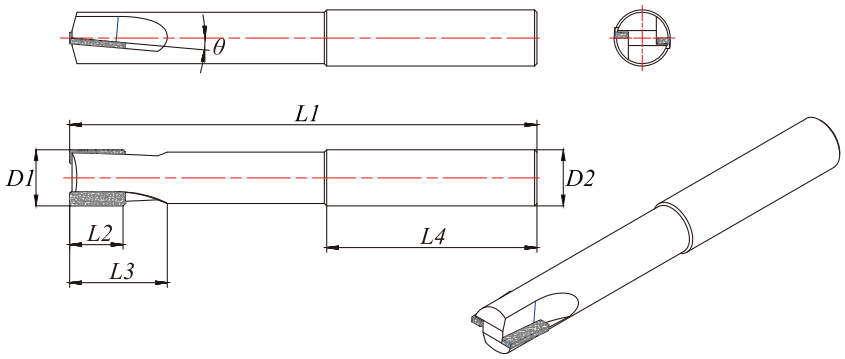

加工工件

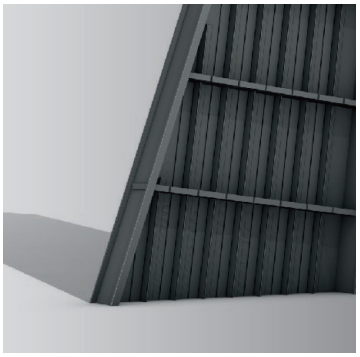

PCD侧铣刀——英制

型号	规格	D1	L2	D2	L1	L3	Z	α	刀粒材质
RE1CR0000-122R	D4.76*6.35*SD4.76*SL52	4.760	6.35	4.760	52	35	2	5°	PCD
RE1CR0000-122R	D6.35*12.7*SD6.35*SL63.5	6.350	12.7	6.350	63.5	37	2	5°	PCD
RE1CR0000-122R	D9.525*19.05*SD9.525*SL101.6	9.525	19.05	9.525	101.6	61	2	5°	PCD
RE1CR0000-122R	D12.7*25.4*SD12.7*SL102	12.700	25.4	12.700	102	61	2	5°	PCD
RE1CR0000-122R	D19.05*25.4*SD19.05*SL102	19.050	25.4	19.050	102	61	2	5°	PCD

定制尺寸

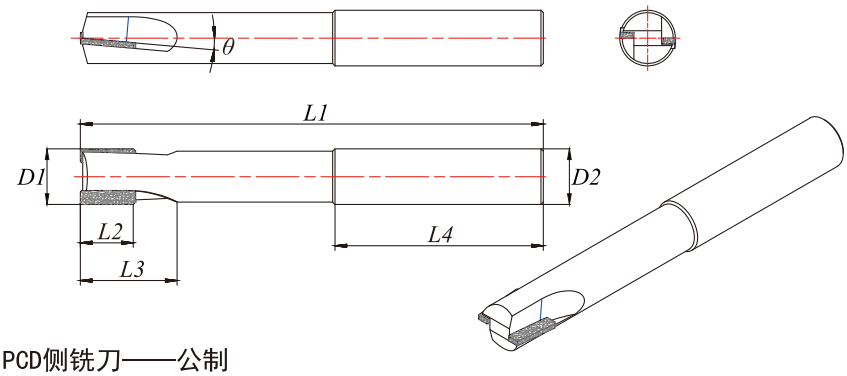

加工工件

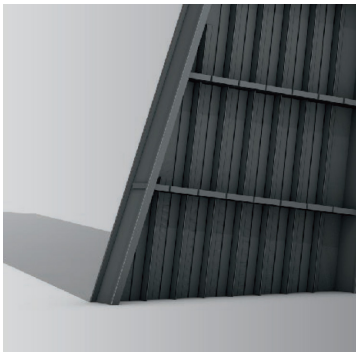

PCD侧铣刀——公制

型号	规格	D1	L2	D2	L1	L3	Z	α	刀粒材质
RE1CR0000-122R	D6*9*SD6*SL50	6	9	6	50	30	2	5°	PCD
RE1CR0000-122R	D8*12*SD8*SL60	8	12	8	60	30	2	5°	PCD
RE1CR0000-122R	D10*15*SD10*SL80	10	15	10	80	45	2	5°	PCD
RE1CR0000-122R	D12*18*SD12*SL100	12	18	12	100	45	2	5°	PCD
RE1CR0000-122R	D16*25*SD16*SL110	16	25	16	110	55	2	5°	PCD

定制尺寸

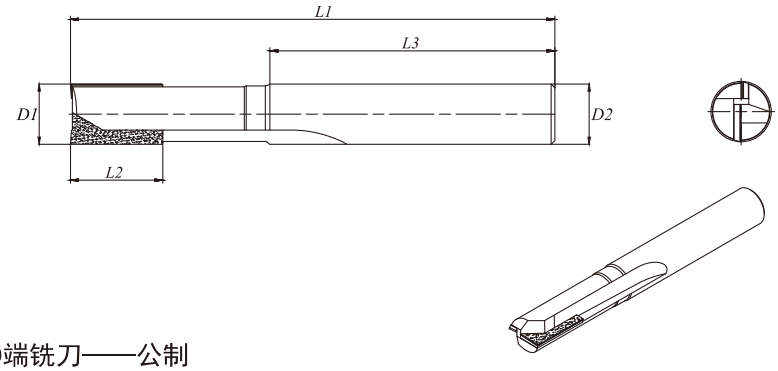

加工工件

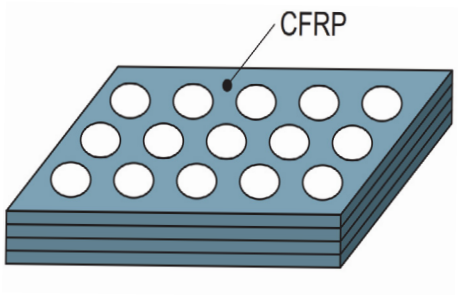

PCD端铣刀——公制

型号	规格	D1	L2	D2	L1	L3	Z	刀粒材质
RE1CR00CC-122R	D6*9*SD6*SL50	6	9	6	50	30	2	PCD
RE1CR00CC-122R	D8*12*SD8*SL60	8	12	8	60	30	2	PCD
RE1CR00CC-122R	D10*15*SD10*SL80	10	15	10	80	45	2	PCD
RE1CR00CC-122R	D12*18*SD12*SL100	12	18	12	100	45	2	PCD
RE1CR00CC-122R	D16*25*SD16*SL110	16	25	16	110	55	2	PCD

定制尺寸

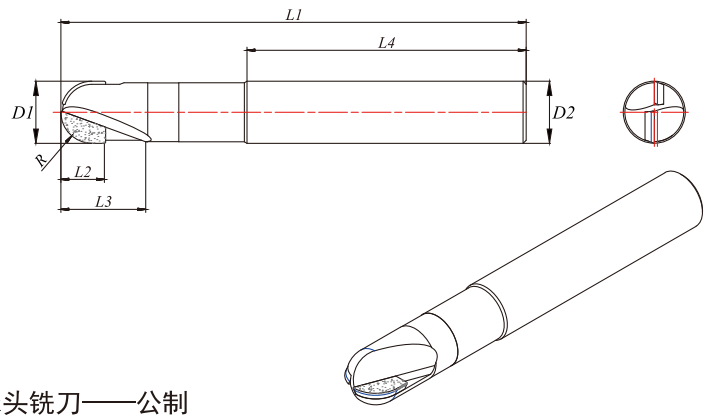

加工工件

PCD球头铣刀——公制

型号	规格	D1	L2	D2	L1	R	L3	Z	刀粒材质
RE1CR00CC-122R	D4*6*SD4*SL45	4	6	4	45	2	35	2	PCD
RE1CR00CC-122R	D6*9*SD6*SL50	6	9	6	50	3	35	2	PCD
RE1CR00CC-122R	D8*12*SD8*SL60	8	12	8	60	4	35	2	PCD
RE1CR00CC-122R	D10*15*SD10*SL70	10	15	10	70	5	40	2	PCD
RE1CR00CC-122R	D12*18*SD12*SL80	12	18	12	80	6	45	2	PCD

定制尺寸

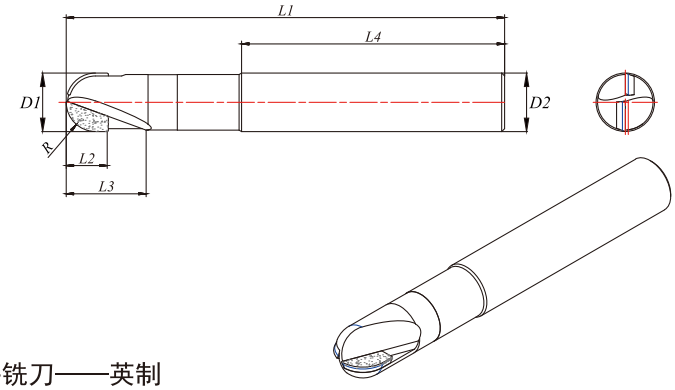

加工工件

PCD球头铣刀——英制

型号	规格	D1	L2	D2	L1	R	L3	Z	刀粒材质
RE1CR00CC-122R	D4.76*6.35*SD4.76*SL50	4.760	6.35	4.76	50	2.38	30	2	PCD
RE1CR00CC-122R	D6.35*9.525*SD6.35*SL60	6.350	9.525	6.35	60	3.18	35	2	PCD
RE1CR00CC-122R	D9.525*12.7*SD9.525*SL70	9.525	12.7	9.525	70	4.76	40	2	PCD
RE1CR00CC-122R	D12.7*14.7*SD12.7*SL80	12.700	14.7	12.7	80	6.35	45	2	PCD
RE1CR00CC-122R	D19.05*20.4*SD19.05*SL90	19.050	20.4	19.05	90	9.53	45	2	PCD

定制尺寸

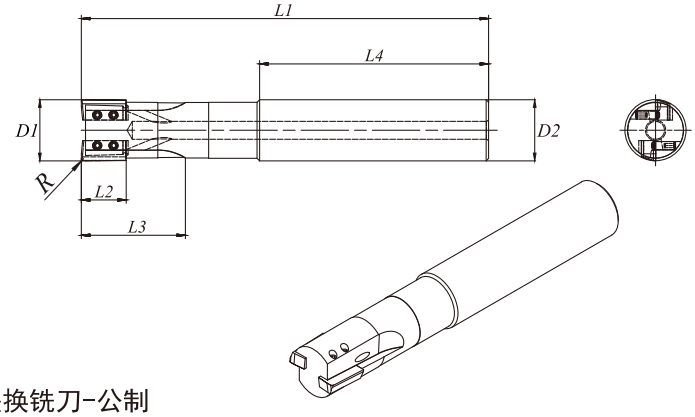

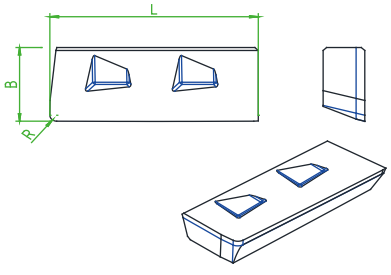

刀片型号	刀片规格	L	B	R
LE12	12x5xR0.5	12	5.00	0.4

PCD快换铣刀-公制

型号	规格	D1	L1	L2	L3	D2	R	α	Z	刀粒材质
EMP012CS12-LE12-080	D12*12*SD12*SL80	12	80	12	30	12	0.4	5°	2	PCD
EMP014CS14-LE12-080	D14*12*SD14*SL80	14	80	12	30	14	0.4	5°	3	PCD
EMP016CS16-LE12-100	D16*12*SD16*SL100	16	100	12	50	16	0.4	5°	4	PCD
EMP018CS18-LE12-120	D18*12*SD18*SL120	18	120	12	50	18	0.4	5°	4	PCD
EMP020CS20-LE12-120	D20*12*SD20*SL120	20	120	12	70	20	0.4	5°	4	PCD
EMP025CS25-LE12-150	D25*12*SD25*SL150	25	150	12	100	25	0.4	5°	5	PCD
EMP032CS32-LE12-150	D32*12*SD32*SL150	32	150	12	100	32	0.4	5°	6	PCD

定制尺寸

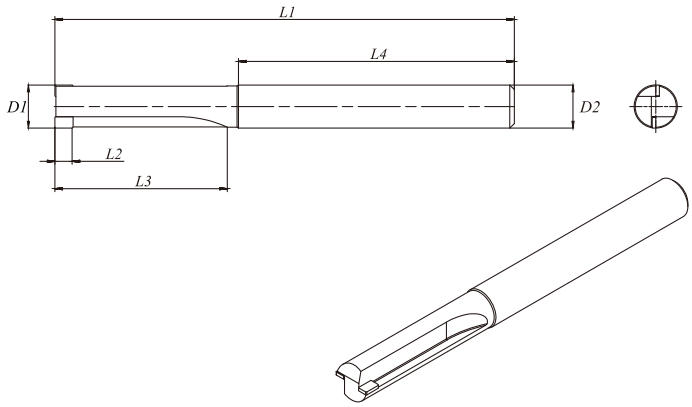

CVDD侧铣刀——英制

型号	规格	D1	L2	D2	L1	L3	Z	刀粒材质
RE1CR0000-122R	D4.76*4.76*SD4.76*SL52	4.760	4.76	4.760	52	35	2	CVDD
RE1CR0000-122R	D6.35*6.35*SD6.35*SL63.5	6.350	6.35	6.350	63.5	37	2	CVDD
RE1CR0000-122R	D9.525*6.35*SD9.525*SL101.6	9.525	6.35	9.525	101.6	61	2	CVDD
RE1CR0000-122R	D12.7*6.35*SD12.7*SL102	12.700	6.35	12.700	102	60	2	CVDD
RE1CR0000-122R	D15.875*6.35*SD19.05*SL102	15.875	6.35	19.050	102	61	2	CVDD

定制尺寸

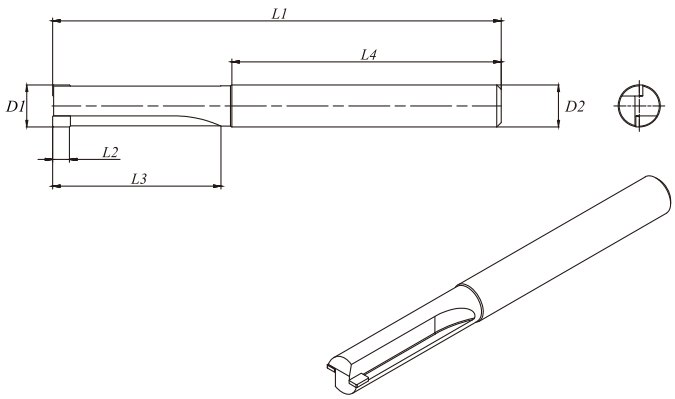

CVDD侧铣刀——公制

型号	规格	D1	L2	D2	L1	L3	Z	刀粒材质
RE1CR0000-122R	D6*4*SD6*SL50	6	4	6	50	30	2	CVDD
RE1CR0000-122R	D8*6*SD8*SL60	8	6	8	60	30	2	CVDD
RE1CR0000-122R	D10*6*SD10*SL80	10	6	10	80	45	2	CVDD
RE1CR0000-122R	D12*6*SD12*SL100	12	6	12	100	45	2	CVDD
RE1CR0000-122R	D16*6*SD16*SL110	16	6	16	110	55	2	CVDD

定制尺寸

HSK 各种型号的形状和特征

VARIOUS FORMS OF HSK SHANKS AVAILABLE

A型 A type

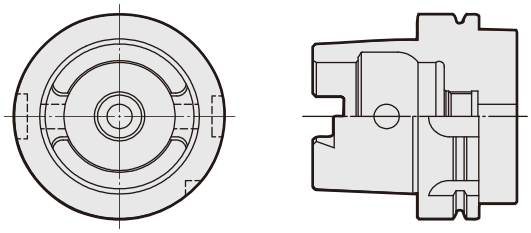

- 用途：加工中心
  For machining centers.
- 通过切削液管可以向轴心供切削液
  Through-the-tool coolant from coolant tube acceptable.
- 依靠锥体上端的驱动槽来传递扭矩
  With drive slots at the top of taper portion.
- ATC 用U槽
  With"U" slot for ATC.
- 手动紧固用孔
  With pin holes for manual clamping.
- 加槽切口
  With a German notch.
- ID 芯片孔(选购)
  With a hole for ID chip.(Option)

B型 B type

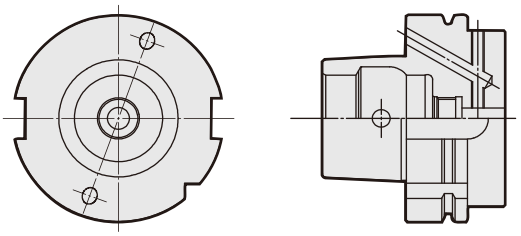

- 用途：加工中心、通用铣床、车床
  For machining centers,milling machines and lathes.
- 通过法兰头或切削液管、可以向轴心供给切削液
  Through-the-tool coolant from flange or from coolant tube acceptable.
- 依靠法兰头部的凹槽来传递扭矩
  With "U" drive slots at the flange.
- 手动紧固用孔
  With pin holes for manual clamping.
- 加槽切口
  With a German notch.
- ID 芯片孔(选购)
  With a hole for ID chip.(Option)
- 和公称刀柄比、锥体部小一个规格
  With one rank smaller taper size.

C型 C type

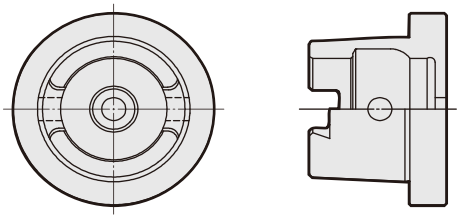

- 用途：如组合机床等无ATC 功能机器专用
  For non- ATC machines,such as transfer machines.
- 可以实现轴心供给切削液
  Through-the-tool coolant acceptable.
- 依靠锥体上端的驱动槽来传递扭矩
  With drive slots at the top of taper portion.

D型 D type

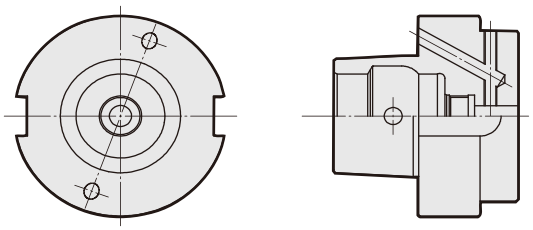

- 用途：如组合机床等无ATC 功能机器专用
  For non- ATC machines,such as transfer machines.
- 使用法兰头或冷却液管实现向轴心供切削液
  Through-the-tool coolant from flange or from coolant tube acceptable.
- 依靠法兰头部的凹槽来传递扭矩
  With "U" drive slots at the flange.
- 和公称刀柄比、锥体部小一个规格
  With one rank smaller taper size.

E型 E type

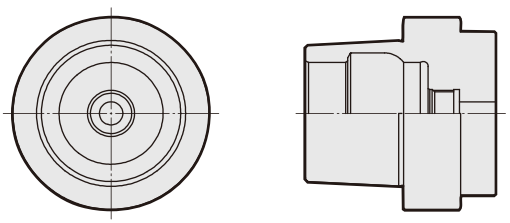

- 用途：高转速加工中心，木工机器
  For high speed machining centers and wood milling machines.
- 对称型，无驱动槽
  With symmertical shank without drive key slot.
- 依靠摩擦来传递扭矩
  Friction transmission.
- 使用切削液管、可以给轴心供切削液
  Through-the-tool coolant from coolant tube acceptalbe.

F型 F type

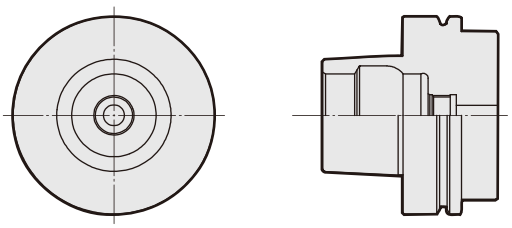

- 使用切削液管、可以给轴心供切是削液
  Through-the-tool coolant from coolant tube
- 和公称刀柄比、锥体部小一个规格
  With one tank smaller taper size.

常用公差配合表

RECOMMENDED GENERAL TOLERANCE

配合性质		基孔基轴制公差								间隙配合					
国标 / 基本尺寸		H5/h5	H6/h6	H7/h7	H8/h8	H9/h9	H10/h10	H11/h11	H12/h12	f7	f8	f9	g5	g6	g7
0	3	.004	.006	.010	.014	.025	.040	.060	.100	-.006 -.016	-.006 -.020	-.006 -.031	-.002 -.006	-.002 -.008	-.002 -.012
3	6	.005	.008	.012	.018	.030	.048	.075	.120	-.010 -.022	-.010 -.028	-.010 -.040	-.004 -.009	-.004 -.012	-.004 -.016
6	10	.006	.009	.015	.022	.036	.058	.090	.150	-.013 -.028	-.013 -.035	-.013 -.049	-.005 -.011	-.005 -.014	-.005 -.020
10	18	.008	.011	.018	.027	.043	.070	.110	.180	-.016 -.034	-.016 -.043	-.016 -.059	-.006 -.014	-.006 -.017	-.006 -.024
18	30	.009	.013	.021	.033	.052	.084	.130	.210	-.020 -.041	-.020 -.053	-.020 -.072	-.007 -.016	-.007 -.020	-.007 -.028
30	50	.011	.016	.025	.039	.062	.100	.160	.250	-.025 -.050	-.025 -.064	-.025 -.087	-.009 -.020	-.009 -.025	-.009 -.034
50	80	.013	.019	.030	.046	.074	.120	.190	.300	-.030 -.060	-.030 -.076	-.030 -.104	-.010 -.023	-.010 -.029	-.010 -.040
80	120	.015	.022	.035	.054	.087	.140	.220	.350	-.036 -.071	-.036 -.090	-.036 -.123	-.012 -.027	-.012 -.034	-.012 -.047
120	180	.018	.025	.040	.063	.100	.160	.250	.400	-.045 -.083	-.043 -.106	-.043 -.143	-.014 -.032	-.014 -.039	-.014 -.054
180	250	.020	.029	.046	.072	.115	.185	.290	.460	-.050 -.096	-.050 -.122	-.050 -.165	-.015 -.035	-.015 -.044	-.015 -.061
250	315	.023	.032	.052	.081	.130	.210	.320	.520	-.056 -.108	-.056 -.137	-.056 -.186	-.017 -.040	-.017 -.049	-.017 -.069
315	400	.025	.036	.057	.089	.140	.230	.360	.570	-.062 -.119	-.062 -.151	-.062 -.202	-.018 -.042	-.018 -.054	-.018 -.070
400	500	.027	.040	.063	.097	.155	.250	.400	.630	-.068 -.131	-.068 -.165	-.068 -.223	-.020 -.047	-.020 -.060	-.020 -.083

配合性质		过渡配合											过盈配合		
国标 / 基本尺寸		+n5 +n5	+m5 +m5	+k5 +k5	±js5	+n6 +n6	+m6 +m6	+k6 +k6	±js6	+n7 +n7	+m7 +m7	+k7 +k7	±js7	+r5 +r5	+r6 +r6
0	3	.008 .004	.006 .002	.004 .000	.0020	.010 .004	.008 .002	.006 .000	.0030	.014 .004	.012 .002	.010 .000	.0050	.014 .010	.016 .010
3	6	.013 .008	.009 .004	.006 .001	.0025	.016 .008	.012 .004	.009 .001	.0040	.020 .008	.016 .004	.013 .001	.0060	.020 .015	.023 .015
6	10	.016 .010	.012 .006	.007 .001	.0030	.019 .010	.015 .006	.010 .001	.0045	.025 .010	.021 .006	.016 .001	.0070	.025 .019	.028 .019
10	18	.020 .012	.015 .007	.009 .001	.0040	.023 .012	.018 .007	.012 .001	.0055	.030 .012	.025 .007	.019 .001	.0090	.031 .023	.034 .023
18	30	.024 .015	.017 .008	.011 .002	.0045	.028 .015	.021 .008	.015 .002	.0065	.036 .015	.029 .008	.023 .002	.0100	.037 .028	.041 .028
30	50	.028 .017	.020 .009	.013 .002	.0055	.033 .017	.025 .009	.018 .002	.0080	.042 .017	.034 .009	.027 .002	.0120	.045 .034	.050 .034
50	65	.033 .020	.024 .011	.015 .002	.0065	.039 .020	.030 .011	.021 .002	.0095	.050 .020	.041 .011	.032 .002	.0150	.054 .041	.060 .041
65	80	.033 .020	.024 .011	.015 .002	.0065	.039 .020	.030 .011	.021 .002	.0095	.050 .020	.041 .011	.032 .002	.0150	.056 .043	.062 .043
80	100	.038 .023	.038 .023	.018 .003	.0075	.045 .023	.035 .013	.025 .003	.0110	.058 .023	.048 .013	.038 .003	.0170	.066 .051	.073 .051
100	120	.038 .023	.038 .023	.018 .003	.0075	.045 .023	.035 .013	.025 .003	.0110	.058 .023	.048 .013	.038 .003	.0170	.069 .054	.076 .054
120	180	.045 .027	.033 .015	.021 .003	.0090	.052 .027	.040 .015	.028 .003	.0125	.067 .027	.055 .015	.043 .003	.0200	.081 .063	.081 .063

标准螺纹底孔尺寸表

DRILL DIAMETERS FOR STANDARDS TAPPING

公制粗牙螺丝 Metric coarse screw thread

螺丝尺寸 Nominal	钻直径 Drill diameter	螺丝尺寸 Nominal	钻直径 Drill diameter	螺丝尺寸 Nominal	钻直径 Drill diameter	螺丝尺寸 Nominal	钻直径 Drill diameter
M 1×0.25	0.75	M2.5×0.45	2.10	M 9×1.25	7.80	M27×3	24.0
M1.1×0.25	0.85	M2.6×0.45	2.20	M10×1.5	8.50	M30×3.5	26.5
M1.2×0.25	0.95	M 3×0.5	2.50	M11×1.5	9.50	M33×3.5	29.5
M1.4×0.3	1.10	M3.5×0.6	2.90	M12×1.75	10.3	M36×4	32.0
M1.6×0.35	1.25	M 4×0.7	3.30	M14×2	12.0	M39×4	35.0
M1.7×0.35	1.35	M4.5×0.75	3.80	M16×2	14.0	M42×4.5	37.5
M1.8×0.35	1.45	M5 ×0.8	4.20	M18×2.5	15.5	M45×4.5	40.5
M 2×0.4	1.60	M6 ×1.0	5.00	M20×2.5	17.5	M48×5	43.0
M2.2×0.45	1.75	M7 ×1.0	6.00	M22×2.5	19.5		
M2.3×0.4	1.90	M8 ×1.25	6.80	M24×3	21.0		

公制细牙螺丝 Metric fine screw thread

螺丝尺寸 Nominal	钻直径 Drill diameter	螺丝尺寸 Nominal	钻直径 Drill diameter	螺丝尺寸 Nominal	钻直径 Drill diameter	螺丝尺寸 Nominal	钻直径 Drill diameter
M 1×0.2	0.80	M11×0.75	10.3	M25×1.5	23.5	M39×1.5	37.5
M1.1×0.2	0.90	M12×1.5	10.5	M25×1.0	24.0	M40×3.0	37.0
M1.2×0.2	1.00	M12×1.25	10.8	M26×1.5	24.5	M40×2.0	38.0
M1.4×0.2	1.20	M12×1.0	11.0	M27×2.0	25.0	M40×1.5	38.5
M1.6×0.2	1.40	M14×1.5	12.5	M27×1.5	25.5	M42×4.0	38.0
M1.8×0.2	1.60	M14×1.0	13.0	M27×1.0	26.0	M42×3.0	39.0
M 2×0.25	1.75	M15×1.5	13.5	M28×2.0	26.0	M42×2.0	40.0
M2.2×0.25	1.95	M15×1.0	14.0	M28×1.5	26.5	M42×1.5	40.5
M2.5×0.35	2.20	M16×1.5	14.5	M28×1.0	27.0	M45×4.0	41.0
M 3×0.35	2.70	M16×1.0	15.0	M30×3.0	27.0	M45×3.0	42.0
M3.5×0.35	3.20	M17×1.5	15.5	M30×2.0	28.0	M45×2.0	43.0
M 4×0.5	3.50	M17×1.0	16.0	M30×1.5	28.5	M45×1.5	43.5
M4.5×0.5	4.00	M18×2.0	16.0	M30×1.0	29.0	M48×4.0	44.0
M 5×0.5	4.50	M18×1.5	16.5	M32×2.0	30.0	M48×3.0	45.0
M5.5×0.5	5.00	M18×1.0	17.0	M32×1.5	30.5	M48×2.0	46.0
M 6×0.75	5.30	M20×2.0	18.0	M33×3.0	30.0	M48×1.5	46.5
M 7×0.75	6.30	M20×1.5	18.5	M33×2.0	31.0	M50×3.0	47.0
M 8×1.0	7.00	M20×1.0	19.0	M33×1.5	31.5	M50×2.0	48.0
M 8×0.75	7.30	M22×2.0	20.0	M35×1.5	33.5	M50×1.5	48.5
M 9×1.0	8.00	M22×1.5	20.5	M36×3.0	33.0		
M 9×0.75	8.30	M22×1.0	21.0	M36×2.0	34.0		
M 10×1.25	8.80	M24×2.0	22.0	M36×1.5	34.5		
M 10×1.0	9.00	M24×1.5	22.5	M38×1.5	36.5		
M 10×0.75	9.30	M24×1.0	23.0	M39×3.0	36.0		
M 11×1.0	10.00	M25×2.0	23.0	M39×2.0	37.0		

※ 由于加工条件不同，钻孔的尺寸精度也要变化，根据此表的钻直径进行加工时需要先测定加工孔，发现不合适时需要变更钻孔。

※ We remind you upon using the drill diameters shown in this table, that the processed hole should be measured since the size accuracy of a drill hole may change due to the milling condition, and that if found to be inappropriate for tapping, the drill diameter must be corrected accordingly.

对六角孔锪孔·螺栓孔尺寸表

DIMENSIONS OF COUNTERBORING FOR HEXAGON SOCKET HEAD CAP SCREWAND BOLT HOLE

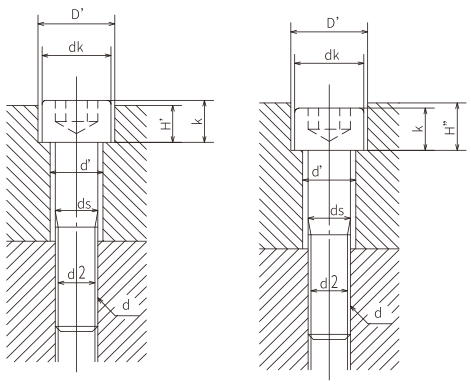

螺丝尺寸(d) Nominal dimensions of thread	ds	d'	dk	D'	k	H'	H''	d2
M3	3	3.4	5.5	6.5	3	2.7	3.3	2.6
M4	4	4.5	7	8	4	3.6	4.4	3.4
M5	5	5.5	8.5	9.5	5	4.6	5.4	4.3
M6	6	6.6	10	11	6	5.5	6.5	5.1
M8	8	9	13	14	8	7.4	8.6	6.9
M10	10	11	16	17.5	10	9.2	10.8	8.6
M12	12	14	18	20	12	11	13	10.4
M14	14	16	21	23	14	12.8	15.2	12.2
M16	16	18	24	26	16	14.5	17.5	14.2
M18	18	20	27	29	18	16.5	19.5	15.7
M20	20	22	30	32	20	18.5	21.5	17.7
M22	22	24	33	35	22	20.5	23.5	19.7
M24	24	26	36	39	24	22.5	25.5	21.2
M27	27	30	40	43	27	25	29	24.2
M30	30	33	45	48	30	28	32	26.7

沃尔德®非标刀具业务范围：

1、根据客户图纸要求设计生产PCD/PCBN铰刀、铣刀及非标刀具产品；

2、根据客户要求，承接整套用刀方案的设计、生产及技术服务；

3、替换原有刀具产品，帮助客户优化现有刀具方案以达到提高寿命降低成本的需求；

4、承接PCD/PCBN非标刀具产品的修磨、换片等业务。

沃尔德®售后服务及客户服务

售前服务

提供非标刀具售前服务，对客户现场的工件材料，工装夹具，生产节拍，机床参数等加工工况进行技术调研，为原有产品的优化升级提供可行性方案；

售后服务

提供非标刀具售后技术服务，对客户使用产品的情况进行技术跟踪服务，以更高的尺寸精度，更优的加工效果，更长的使用寿命，更快的生产节拍满足客户的加工要求。

WT00-01-2020
超硬切削工具综合样本册

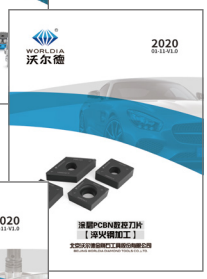

01-11-2020
涂层PCBN数控刀片
【淬火钢加工】

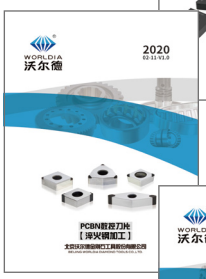

02-11-2020
PCBN数控刀片【淬火钢加工】

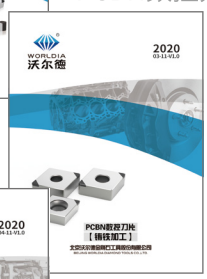

03-11-2020
PCBN数控刀片
【铸铁加工】

04-11-2020
PCBN数控刀片【粉末冶金加工】

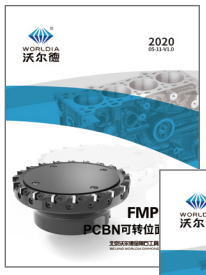

05-11-2020
FMP-SD PCBN可转位面铣刀

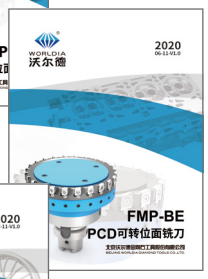

06-11-2020
FMP-BE PCD可转位面铣刀

07-11-2020
PCD/CVDD 数控刀片

08-11-2020
PCD 非标刀具

10-11-2020
槽加工解决方案

公制英制换算表

公制单位：mm				英制单位：in			
in（"）	mm	in（"）	mm	in（"）	mm	in（"）	mm
1/64	0.3969	17/64	6.7469	33/64	13.0969	49/64	19.4469
1/32	0.7938	9/32	7.1438	17/32	13.4938	25/32	19.8438
3/64	1.1906	19/64	7.5406	35/64	13.8906	51/64	20.2406
1/16	1.5875	5/16	7.9375	9/16	14.2875	13/16	20.6375
5/64	1.9844	21/64	8.3344	37/64	14.6844	53/64	21.0344
3/32	2.3813	11/32	8.7313	19/32	15.0813	27/32	21.4313
7/64	2.7781	23/64	9.1281	39/64	15.4781	55/64	21.8281
1/8	3.1750	3/8	9.5250	5/8	15.8750	7/8	22.2250
9/64	3.5719	25/64	9.9219	41/64	16.2719	57/64	22.6219
5/32	3.9688	13/64	10.3188	21/32	16.6688	29/32	23.0188
11/64	4.3656	27/64	10.7156	43/64	17.0656	59/64	23.4156
3/16	4.7625	7/16	11.1125	11/16	17.4625	15/16	23.8125
13/64	5.1594	29/64	11.5094	45/64	17.8594	61/64	24.2094
7/32	5.5563	15/32	11.9063	23/32	18.2563	31/32	24.6063
15/64	5.9531	31/64	12.3031	47/64	18.6531	63/64	25.0031
1/4	6.3500	1/2	12.7000	3/4	19.0500	1	25.4000

WORLDIA®

角逐行业巅峰 缔造世界名牌

COMPETE FOR THE TOP CREATE GLOBAL BRAND

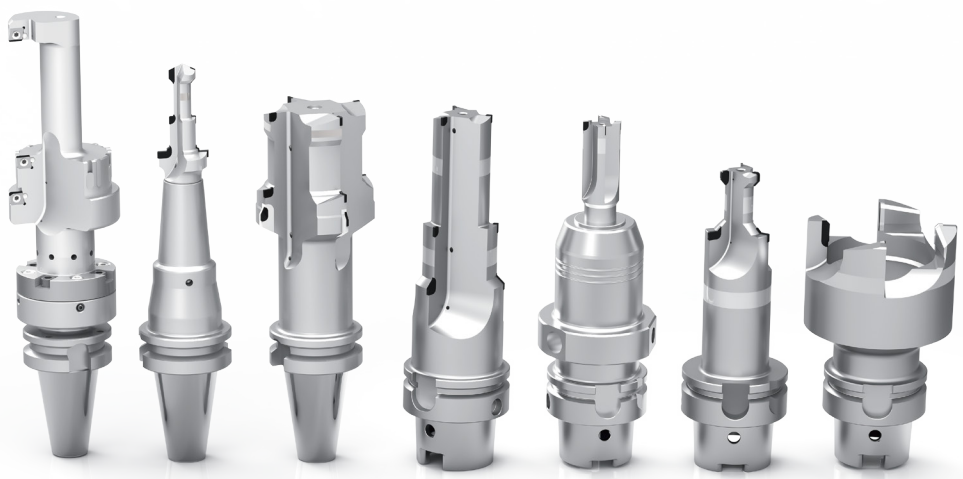

www.worldiatools.com

www.cuttingtoolchina.com

电话：+86-10-58411388 传真：+86-10-58411388-8030

地址：河北省廊坊市大厂潮白河工业区工业二路东侧（065300）

E-mail：marketing@worldiatools.com